1. ALL RESISTANCE VALUES ARE IN OHMS, 0.1 WATT +/- 5%.
2. ALL CAPACITANCE VALUES ARE IN MICROFARADS.
3. ALL CRYSTALS & OSCILLATOR VALUES ARE IN HERTZ.

SCHEM,MLB_BAFFIN,X363G

REV	ECN	DESCRIPTION OF REVISION	CK APPD / DATE
10	0006897289	ENGINEERING RELEASED	2016-08-24

PAGE	CSA	CONTENTS	SYNC	DATE
1	1	MLB_BAFFIN		
2	2	BOM Configuration	J80_MLB	07/07/2015
3	3	BOM Configuration	J80_MLB_BAFFIN_CLEAN	12/02/2015
4	4	PD Parts	J80_MLB	11/16/2015
5	5	CPU DMI/PEG/FDI/RSVD	X363_AGOTETI	01/21/2016
6	6	CPU Clock/Misc/JTAG/CFG	J80_MLB	11/06/2015
7	7	CPU DDR3 Interfaces	J80_MLB	11/06/2015
8	8	CPU Power	J80_MLB	08/16/2015
9	9	CPU Ground	J80_MLB	08/17/2015
10	10	CPU Decoupling 1 [10]	J80_DTUZMAN_MLB_BAFFIN	11/22/2015
11	11	CPU Decoupling 2 [11]	X363_SEAN	02/01/2016
12	12	PCH RTC/HDA/JTAG/SATA/CLK	X363_SAKKOC	04/14/2016
13	13	PCH DMI/FDI/PM/GFX/PCI	J80_MLB	11/06/2015
14	14	PCH PCI-E/USB	X363_SAKKOC	04/14/2016
15	15	PCH GPIO/MISC/NCTF	X363_SAKKOC	04/29/2016
16	16	PCH Power	X363_SAKKOC	01/25/2016
17	17	PCH DECOUPLING	J80_MLB	11/06/2015
18	18	CPU/PCH Merged XDP	X363_SAKKOC	01/25/2016
19	19	Chipset Support 1	X363_SAKKOC	04/29/2016
20	20	Chipset Support 2	X363_SAKKOC	01/14/2016
21	22	LPDDR3 VREF MARGINING	J80_MLB	11/06/2015
22	23	LPDDR3 DRAM Channel A (0-31)	J80_MLB	11/06/2015
23	24	LPDDR3 DRAM Channel A (32-63)	J80_MLB	11/06/2015
24	25	LPDDR3 DRAM Channel B (0-31)	J80_MLB	11/06/2015
25	26	LPDDR3 DRAM Channel B (32-63)	J80_MLB	11/06/2015
26	27	LPDDR3 DRAM Termination	J80_MLB	11/06/2015
27	28	USB-C HIGH SPEED 1	J80_MLB	11/06/2015
28	29	USB-C HIGH SPEED 2	J80_MLB	11/06/2015
29	30	USB-C Support	X363_AGOTETI	08/08/2016
30	31	USB-C PORT CONTROLLER A	X362_GKOO	08/08/2016
31	32	USB-C PORT CONTROLLER B	J80_MLB	11/06/2015
32	33	USB-C CONNECTOR A	X362_MLB	03/30/2016
33	34	USB-C CONNECTOR B	X362_MLB	03/29/2016
34	35	TBT 5V REGULATOR	J80_ZIFENGSHEN_MLB_BAFFIN	12/04/2015
35	37	WIFI/BT: MODULE 1	X363_SAKKOC	04/29/2016
36	38	WIFI/BT: MODULE 2	J80_MLB	11/06/2015
37	39	Camera/DFR 1	X363_SAKKOC	04/29/2016
38	40	Camera/DFR 2	X362_T208	03/22/2016
39	41	Camera/DFR 3	X362_T208	04/25/2016
40	42	Berkelium - 1	X362_T208	01/27/2016
41	43	Berkelium - 2	X362_T208	03/15/2016
42	44	T208 Support	X362_T208	06/30/2016
43	45	Connectors&ESD	X363_SAMANTHA	01/08/2016
44	47	External A USB3 Connector	J80_MLB	08/26/2015
45	49	MESA	X362_P49	01/08/2016
46	50	SMC	X363_ZIFENGSHEN	04/14/2016
47	51	SMC Shared Support	J80_ZIFENGSHEN_MLB_BAFFIN	11/19/2015
48	52	SMC Project Support	X363_ZIFENGSHEN	04/14/2016
49	53	SMBus Connections	X363_ZIFENGSHEN	04/14/2016
50	54	Power Sensors: High Side	X363_ZIFENGSHEN	04/14/2016
51	55	Power Sensors: Load Side	X363_ZIFENGSHEN	04/14/2016
52	56	Power Sensors: Extended	X363_ZIFENGSHEN	04/14/2016
53	57	Power Sensors: Extended 2	X363_ZIFENGSHEN	04/14/2016
54	58	Thermal Sensors	X363_ZIFENGSHEN	04/14/2016
55	59	Sensor Extended 3	X363_ZIFENGSHEN	05/19/2016
56	60	Fans	X363_ZIFENGSHEN	04/14/2016
57	61	SPI Debug Connector	J80_MLB	11/06/2015
58	62	HDA Bridge	X363_AUDIO	01/11/2016
59	63	AUDIO JACK CODEC	X363_AUDIO	01/25/2016
60	64	AUDIO Speaker Amps & Conn	X363_AUDIO	01/25/2016
61	65	AUDIO Speaker Amps & Conn	X363_AUDIO	01/25/2016
62	66	AUDIO JACK CONNECTOR	J80_MLB	11/06/2015
63	69	DC-In & Battery Connectors	J80_MLB	11/06/2015
64	70	PBUS Supply & Battery Charger	J80_MLB	11/06/2015
65	71	CORE & SA IMVP IC	J80_DTUZMAN_MLB_BAFFIN	12/10/2015
66	72	CORE IMVP POWER BLOCK	J80_DTUZMAN_MLB_BAFFIN	09/03/2015
67	73	SA IMVP IC	J80_DTUZMAN_MLB_BAFFIN	11/18/2015
68	74	GT & GTX IMVP POWER BLOCK	J80_DTUZMAN_MLB_BAFFIN	09/03/2015
69	76	Power - 5V 3.3V Supply	J80_DTUZMAN_MLB_BAFFIN	12/09/2015
70	78	PMIC-1 & Power Control	J80_MLB	12/08/2015
71	79	PMIC-1 1.2V 0.6V VCCIO	J80_MLB	11/06/2015
72	80	PMIC-1 1V 1.8V VCCPCH	X363_ZIFENGSHEN	04/14/2016
73	81	PMIC-1 Aliases & TPs	J80_SILUCHEN_MLB_BAFFIN	12/08/2015
74	82	Power FETs	J80_SAKKOC_MLB_BAFFIN	12/11/2015
75	84	LCD Backlight Driver	J80_DTUZMAN_MLB_BAFFIN	12/03/2015
76	85	eDP Display Connector	J80_ZIFENGSHEN_MLB_BAFFIN	12/03/2015
77	86	POLARIS_CONTROLLER	X363_JSAMUELS	04/01/2016
78	87	POLARIS POWER	X363_JSAMUELS	05/18/2016
79	88	POLARIS GND	X363_JSAMUELS	04/01/2016
80	89	Connector	X363_JSAMUELS	04/01/2016
81	90	TEMP SENSORS	J80_MLB	11/06/2015
82	91	NAND 1/2	X363_JSAMUELS	08/09/2016
83	92	NAND 2/2	X363_JSAMUELS	08/09/2016
84	93	POLARIS PMIC	X363_JSAMUELS	08/09/2016
85	94	SSD NAND VR	X363_JSAMUELS	04/01/2016
86	95	SSD SUPPORT	X363_ZIFENGSHEN	04/15/2016
87	96	Lifeboat	X363_BBABADI	01/20/2016
88	97	Constraints	Constraints	05/18/2016
89	98	eDP Mux	dpmux	08/22/2015
90	99	GPU PCC	X363_SEAN	01/27/2016
91	100	BAFFIN PCI-E	X363_SEAN	01/27/2016
92	101	Baffin CORE/FB POWER	X363_SEAN	02/01/2016
93	102	Baffin FRAME BUFFER I/F	J80_SEAN	04/29/2015
94	103	Baffin 1V05 GPU / 1V35 FB Power Supply	J80_DTUZMAN_MLB_BAFFIN	12/08/2015
95	104	GDDR5 Frame Buffer A	J80_SEAN	04/29/2015
96	105	GDDR5 Frame Buffer B	J80_SEAN	04/29/2015
97	106	GFX IMVP VCore Regulator [106]	J80_DTUZMAN_MLB_BAFFIN	12/08/2015
98	107	Baffin GPIOs,CLK & Straps	X363_SEAN	01/28/2016
99	108	Baffin DP/GPIO	X363_SEAN	01/27/2016
100	109	Baffin VSS & MISC	X363_SEAN	01/27/2016
101	110	USB-C HIGH SPEED 1	J80_MLB	11/06/2015
102	111	USB-C HIGH SPEED 2	J80_MLB	11/06/2015
103	112	USB-C Support	J80_AGOTETI_MLB_BAFFIN	12/07/2015
104	113	USB-C PORT CONTROLLER A	J80_MLB	11/06/2015
105	114	USB-C PORT CONTROLLER B	J80_MLB	11/06/2015
106	115	USB-C CONNECTOR A	X362_MLB	03/30/2016
107	116	USB-C CONNECTOR B	X362_MLB	03/29/2016
108	117	TBT 5V REGULATOR	J80_ZIFENGSHEN_MLB_BAFFIN	12/04/2015
109	120	Power Aliases - 1	J80_MLB	08/16/2015
110	121	Power Aliases - 2	X363_SAKKOC	01/14/2016
111	122	Signal Aliases	X363_SAKKOC	01/13/2016
112	123	Memory Bit/Byte Swizzle	J80_MLB	11/06/2015
113	124	ICT & FCT 1	X363_SAKKOC	04/14/2016
114	125	ICT & FCT 2	J80_BBABADI_MLB_BAFFIN	12/10/2015
115	126	NC & No Test	X363_BBABADI	01/26/2016
116	127	Desense Caps	X363_ZIFENGSHEN	04/15/2016
117	128	Desense Caps	DESENSE	05/18/2016
118	130	Project Specific Constraints	X363_ZIFENGSHEN	06/02/2016
119	141	639 BOM Configuration	J80_MLB	07/23/2015
120	142	639 BOM Configuration 2	J80_MLB	07/23/2015

DRAWING
TITLE=MLB_BAFFIN
ABBREV=ABBREV
LAST_MODIFIED=Wed Aug 24 09:57:44 2016

Schematic / PCB #'s

PART NUMBER	QTY	DESCRIPTION	REFERENCE DES	CRITICAL	BOM OPTION
051-00647	1	SCHEM,MLB-BAFFIN,X363G	SCH	CRITICAL	
820-00281	1	PCBF,MLB-BAFFIN,X363G	PCB	CRITICAL	

LAST_MODIFICATION=Wed Aug 24 09:57:44 2016

This is the PVT design

DRAWING TITLE
SCHEM,MLB-BAFFIN,X363

Apple Inc.

DRAWING NUMBER 051-00647 SIZE D
REVISION 10.0.0
BRANCH dvt-fab10
PAGE 1 OF 145
SHEET 1 OF 121

NOTICE OF PROPRIETARY PROPERTY:
THE INFORMATION CONTAINED HEREIN IS THE PROPRIETARY PROPERTY OF APPLE INC.
THE POSESSOR AGREES TO THE FOLLOWING:
I TO MAINTAIN THIS DOCUMENT IN CONFIDENCE
II NOT TO REPRODUCE OR COPY IT
III NOT TO REVEAL OR PUBLISH IT IN WHOLE OR PART
IV ALL RIGHTS RESERVED

WWW.AliSaler.Com

BOM Variants

BOM NUMBER	BOM NAME	BOM OPTIONS
685-00076	COMMON PARTS,MLB-BAFFIN,X363	X363_COMMON
985-00126	DEV,MLB-BAFFIN,X363	X363_DEVEL:PVT
985-00232	DEV,MLB-BAFFIN,PVT,X363	X363_DEVEL:PVT

639 BOMs have been moved to the end of the schematic

GPU Options

BOM GROUP	BOM OPTIONS
2GB_MC_BAFFIN	FB_2GB_MICRON,VRAM:GRP1
2GB_HY_BAFFIN	FB_2GB_HYNIX,VRAM:GRP1
2GB_SM_BAFFIN	FB_2GB_SAMSUNG,VRAM:GRP2
4GB_SM_BAFFIN	FB_4GB_SAMSUNG,VRAM:GRP1
4GB_MC_BAFFIN	FB_4GB_MICRON,VRAM:GRP1

FB VDRAM Parts

PART NUMBER	QTY	DESCRIPTION	REFERENCE DES	CRITICAL	BOM OPTION
333S00044	4	IC,GDDR5,4Gb,7Gbps,1.5V,25NM,A,170 BGA	UA400,UA450,UA500,UA550	CRITICAL	FB_2GB_MICRON
333S00043	4	IC,GDDR5,4Gb,7Gbps,1.5V,25NM,A,170 BGA	UA400,UA450,UA500,UA550	CRITICAL	FB_2GB_HYNIX
333S00078	4	IC,GDDR5,8Gb,7Gbps,1.5V,25NM,B,170 BGA	UA400,UA450,UA500,UA550	CRITICAL	FB_2GB_SAMSUNG
333S00074	4	IC,GDDR5,8Gb,7Gbps,1.5V,25NM,B,170 BGA	UA400,UA450,UA500,UA550	CRITICAL	FB_4GB_SAMSUNG
333S00075	4	IC,GDDR5,8Gb,7Gbps,1.5V,25NM,A,170 BGA	UA400,UA450,UA500,UA550	CRITICAL	FB_4GB_MICRON

Sub-BOM DIPLEXER

BOM NUMBER	BOM NAME	BOM OPTIONS
685-00085	DIPLEXERS,MURATA,X363G	DIPLEXER:MURATA

X363 BOM Groups

BOM GROUP	BOM OPTIONS
X363_COMMON	ALTERNATE,COMMON,X363_COMMON1,X363_COMMON2,X363_COMMON3,X363_COMMON4,X363_PROGPARTS
X363_COMMON1	SOC:HYNIX,SE:PROD,SKIP_5V3V3:AUDIBLE,DIPLEXER:MURATA,T208_PROG:REV5,BOARD_ID:17,VCCHDA:S0
X363_COMMON2	XDP:YES,SAMCONN,SOC_BOOT:SPI,DPMUX_XTAL:NO,GPUCLK:OSC,BAFFIN,AP_TEMP,VCCPLLOC:S3,WIFI_SAK:NO
X363_COMMON3	CPUTHRM:ALRT,TBTTHRM:ALRT,LOADRC:NO,OTHERRC:YES,DDRRC:YES,TBTRC:YES,TPADRC:YES,LID_FEATURE_ON
X363_COMMON4	EDP:YES,CPUPEG:X8X4X4,TBTTHRM_SNS,GPUTHRM_SNS,S3_STATE:YES,GPU_ROM:YES,SVID_PU:CORE
X363_PROGPARTS	BOOTROM_PROG:DVT,BT_PROG:DVT,WIFI_PROG:DVT,UPCROM_PROG:DVT,SMC_PROG:PVT,DPMUXMCU:PROG,PCC:NO
X363_DEVEL:ENG	ALTERNATE,ENGISNS,DBGLED,XDP_CONN,USBC_DBG,DBG_BTN,DBG_FAN,DBG_XTAL,DPMUX_DEBUG,WIFI_DBG,SSD_DEBUG,GPUROM:BLANK,PCC:YES
X363_DEVEL:DVT	ALTERNATE,ENGISNS,DBGLED,XDP_CONN,USBC_DBG,DBG_BTN,DBG_FAN,DBG_XTAL,DPMUX_DEBUG,WIFI_DBG,SSD_DEBUG
X363_DEVEL:PVT	ALTERNATE,XDP_CONN,USBC_DBG
ENGISNS	TBTISNS,LOADISNS,TPADISNS,DDRISNS,OTHERISNS

Module Parts

PART NUMBER	QTY	DESCRIPTION	REFERENCE DES	CRITICAL	BOM OPTION
337S00227	1	CPU,SKY,SR2FT,R1,PRQ,4/2,2.9,BGA1440	U0500	CRITICAL	CPU_SKL:2.9
337S00228	1	CPU,SKY,SR2FU,R1,PRQ,4/2,2.7,BGA1440	U0500	CRITICAL	CPU_SKL:2.7
337S00229	1	CPU,SKY,SR2FQ,R1,PRQ,4/2,2.6,BGA1440	U0500	CRITICAL	CPU_SKL:2.6
998-04701	1	INTERPOSER,INTEL,BGA1440,MM940989	U0500	CRITICAL	CPU_SKL:SOCKET
337S00258	1	IC,SKL PCH-H,SFF,SR2NH,PRQ,D1,BGA939	U1100	CRITICAL	
353S00961	4	IC,CD3215,ACE,C0,USB PWR SW,BLNK,BGA96	U3100,U3200,UB300,UB400	CRITICAL	
338S00254	2	IC,TBT,ALPINE RIDGE DP,QT5S,QS,C1,BGA337	U2800,UB000	CRITICAL	
353S01016	1	IC,ISL9239HIZ,PMU,TUBA,WCSP40,2.1X3.3MM	U7000	CRITICAL	
338S00221	1	IC,PMU,P650839,7X7MM.BGA168	U7800	CRITICAL	
338S00142	1	IC,CODEC,CLIFDEN,CS42L83A,B0,WLCSP49	U6300	CRITICAL	
337S00330	1	IC,GPU,BAFFIN,ULA,A1,PS,BGA769	UA000	CRITICAL	BAFFIN_ULA
337S00331	1	IC,GPU,BAFFIN,PROA,A1,PS,BGA769	UA000	CRITICAL	BAFFIN_PROA
337S00332	1	IC,GPU,BAFFIN,LEA,A1,PS,BGA769	UA000	CRITICAL	BAFFIN_LEA
998-04866	1	INTERPOSER,AMD,C989,BGA769,VDDCI/MVDD	UA000	CRITICAL	STARDUST:VDDCI_MVDD
998-04867	1	INTERPOSER,AMD,C988,BGA769,VDDC	UA000	CRITICAL	STARDUST:VDDC
677-04532	2	SUBASSY (T&R) PCBA, AMR, INTERPOSER, X363	J5250,J5260	CRITICAL	

Development/Base BOMs

PART NUMBER	QTY	DESCRIPTION	REFERENCE DES	CRITICAL	BOM OPTION
685-00076	1	COMMON PARTS,MLB-BAF,X363	BASE	CRITICAL	BASE_BOM
985-00126	1	DEV,MLB-BAF,X363	DEVEL	CRITICAL	DEVEL_BOM

WIFI/BT Diplexers

PART NUMBER	QTY	DESCRIPTION	REFERENCE DES	CRITICAL	BOM OPTION
155S0979	3	FLTR,DIPLEXER,2.45/5.54GHZ,0805	U3810,U3820,U3830	CRITICAL	DIPLEXER:MURATA

Main DRAM Parts

PART NUMBER	QTY	DESCRIPTION	REFERENCE DES	CRITICAL	BOM OPTION
333S00050	4	IC,SDRAM,LPDDR3-2133,32GBIT,20NM,BGA178	U2300,U2400,U2500,U2600	CRITICAL	16G_SAMSUNG_2133
333S00070	4	IC,SDRAM,LPDDR3-2133,32GBIT,20NM,BGA178	U2300,U2400,U2500,U2600	CRITICAL	16G_MICRON_2133

Main DRAM SPD Straps

BOM GROUP	BOM OPTIONS
RAM_16G_SAMSUNG_2133	16G_SAMSUNG_2133,RAMCFG4:L,RAMCFG3:L,RAMCFG0:L
RAM_16G_MICRON_2133	16G_MICRON_2133,RAMCFG4:L,RAMCFG3:L,RAMCFG1:L

Strategic Silicon

PART#	STRATEGIC VALUE	COMMENT
337S00227	08	CPU
337S00228	08	CPU
337S00229	08	CPU
333S00050	07	MAIN MEMORY
333S00070	07	MAIN MEMORY
335S00149	02	SSD NAND
335S00204	02	SSD NAND
335S00205	02	SSD NAND
335S00219	02	SSD NAND
339S00154	02	SSD CONTROLLER
339S00155	02	SSD CONTROLLER
338S00166	02	SSD PMIC
337S00225	08	GPU
337S00285	08	GPU
337S00286	08	GPU
333S00044	07	VIDEO MEMORY
333S00043	07	VIDEO MEMORY
333S00078	07	VIDEO MEMORY
333S00074	07	VIDEO MEMORY
333S00075	07	VIDEO MEMORY
343S00135	10	T208
343S00136	10	T208
343S00137	10	T208
338S00138	10	T208
338S00193	09	BERKELIUM
353S3978	02	MOJAVE
338S00097	02	SECURE ELEMENT
338S00254	08	ALPINE RIDGE
353S00961	09	ACE
338S00142	09	CLIFDEN
353S00604	07	AUDIO AMP
353S4316	08	BAYSIDE
338S00221	08	BANJO
353S00853	09	TUBA
339S00056	05	ICEBOCK
359S00006	08	GREEN CLOCK
353S00795	09	DEBUG MUX

SYNC_MASTER=J80_MLB SYNC_DATE=07/07/2015

PAGE TITLE
BOM Configuration

Apple Inc.

DRAWING NUMBER 051-00647 SIZE D
REVISION 10.0.0
BRANCH dvt-fab10
PAGE 2 OF 145
SHEET 2 OF 121

NOTICE OF PROPRIETARY PROPERTY:
THE INFORMATION CONTAINED HEREIN IS THE PROPRIETARY PROPERTY OF APPLE INC.
THE POSESSOR AGREES TO THE FOLLOWING:
I TO MAINTAIN THIS DOCUMENT IN CONFIDENCE
II NOT TO REPRODUCE OR COPY IT
III NOT TO REVEAL OR PUBLISH IT IN WHOLE OR PART
IV ALL RIGHTS RESERVED

WWW.AliSaler.Com

Programmable Parts

PART NUMBER	QTY	DESCRIPTION	REFERENCE DES	CRITICAL	BOM OPTION	
338S1231	1	IC,SMC12,40MHZ/50DMIPS MCU,7X7,168BGA	U5000	CRITICAL	SMC_PROG:BLANK	Blank
341S00701	1	IC,SMC-B1,EXT (v2.37F7) PVT,X363G	U5000	CRITICAL	SMC_PROG:PVT	TI
335S00013	1	IC,SPI SERIAL FLASH,64M BITS,3V,8P SOIC,QE=1	U6100	CRITICAL	BOOTROM_PROG:BLANK	Blank
341S00699	1	IC,EFI ROM (V0193), DVT, X363G	U6100	CRITICAL	BOOTROM_PROG:DVT	Macronix/Winbond
353S00926	2	IC,CD3215,ACE,B03,BLNK,BGA96	U2890,UB090	CRITICAL	UPCROM_PROG:BLANK	Blank
341S00707	1	T29,AR1 (V10.5) PVT, X363G	U2890	CRITICAL	UPCROM_PROG:DVT	Winbond
341S00708	1	T29,AR2 (V10.5) PVT, X363G	UB090	CRITICAL	UPCROM_PROG:DVT	Winbond
335S00024	1	IC,SERIAL-FLASH,2MBIT,4V,8-USON,2x3x,6MM	U3750	CRITICAL	BT_PROG:BLANK	Blank
341S00695	1	IC,BT ROM (V28), DVT, X362/X363	U3750	CRITICAL	BT_PROG:DVT	Macronix/Winbond
341S00709	1	WIFI ROM (P107) DVT,NEW,WW1,X362/X363	U3710	CRITICAL	WIFI_PROG:DVT	Rohm/On Semi
341S3565	1	IC, EDP MUX-95C, (RENESAS) V3.2.8,DVB,D2	U9800	CRITICAL	DPMUXMCU:PROG	
335S0724	1	IC,1Mbit SERIAL FLASH 2X3X0.6MM UFDFPN8 PKG	UA701	CRITICAL	GPUROM:BLANK	Blank

NOTICE OF PROPRIETARY PROPERTY:
THE INFORMATION CONTAINED HEREIN IS THE PROPRIETARY PROPERTY OF APPLE INC.
THE POSESSOR AGREES TO THE FOLLOWING:
I TO MAINTAIN THIS DOCUMENT IN CONFIDENCE
II NOT TO REPRODUCE OR COPY IT
III NOT TO REVEAL OR PUBLISH IT IN WHOLE OR PART
IV ALL RIGHTS RESERVED

WWW.AliSaler.Com

Pogo Pins

APN 870-01771
PG0410
POGO-2.30D-4.63H-SM
SM

PG0411
POGO-2.30D-4.63H-SM
SM

PG0420
POGO-2.30D-4.63H-SM
SM

PG0421
POGO-2.30D-4.63H-SM
SM

PG0430
POGO-2.30D-4.63H-SM
SM

PG0471
POGO-2.30D-4.63H-SM
SM

PG0470
POGO-2.30D-4.63H-SM
SM

APN 870-01772
PG0400
POGO-2.30D-4.06H-SM
SM

PG0401
POGO-2.30D-4.06H-SM
SM

SMT Bosses

APN 860-00392
BS0400
3.40D1.75ID-1.12H-SM
USB-C Left
BOT side - North

BS0401
3.40D1.75ID-1.12H-SM
USB-C Left
BOT side - South

BS0410
3.40D1.75ID-1.12H-SM
USB-C Right
BOT side - North

BS0411
3.40D1.75ID-1.12H-SM
USB-C Right
BOT side - South

APN 806-06520
BS0420
3.40D1.75ID-1.45H-SM
DFR Touch
BOT side

APN 806-06600
BS0480
3.40D1.75ID-2.12H-SM
USB-C Right
BOT side - Left

APN 806-06521
BS0430
3.40D1.75ID-1.9H-SM
DFR Display
BOT side - Left

BS0431
3.40D1.75ID-1.9H-SM
DFR Display
BOT side - Right

BS0440
3.40D1.75ID-1.9H-SM
Keyboard
BOT side - Left

BS0441
3.40D1.75ID-1.9H-SM
Keyboard
BOT side - Right

BS0450
3.40D1.75ID-1.9H-SM
Trackpad
BOT side - Left

BS0451
3.40D1.75ID-1.9H-SM
Trackpad
BOT side - Right

APN 860-00413
BS0460
3.40D1.75ID-1.57H-SM
Lifeboat
BOT side - North

BS0461
3.40D1.75ID-1.57H-SM
Lifeboat
BOT side - South

APN 860-00469
BS0470
2.7X1.8R-1.4ID-0.91H-SM
eDP
TOP side - Left

BS0701
2.7X1.8R-1.4ID-0.91H-SM
eDP
TOP side - Right

APN 806-07958
TOUCH-COWLING-HOOK-X378
BS0704
SM
DFR Touch - TOP side

Rubber Mount Standoffs

APN 860-00452
BM0400
3.090D1.4ID-3.25H-SM

APN 860-00435
BM0401
2.80D1.2ID-1.55H-SM

BM0402
2.80D1.2ID-1.55H-SM

BM0403
2.80D1.2ID-1.55H-SM

BM0404
2.80D1.2ID-1.55H-SM

BM0405
2.80D1.2ID-1.55H-SM

BM0406
2.80D1.2ID-1.55H-SM

BM0407
2.80D1.2ID-1.55H-SM

BM0408
2.80D1.2ID-1.55H-SM

BM0409
2.80D1.2ID-1.55H-SM

BM0410
2.80D1.2ID-1.55H-SM

BM0411
2.80D1.2ID-1.55H-SM

BM0483
2.80D1.2ID-1.55H-SM

APN 860-00500
BM0484
2.80D1.2ID-3.5H-SM

APN 860-00500
BM0485
2.80D1.2ID-3.5H-SM

BM0486
2.80D1.2ID-3.5H-SM

BM0487
2.80D1.2ID-3.5H-SM

Shield Can TH

APN 998-2691
TH0400
TH-NSP
SL-1.1X0.4-1.4X0.7
System Memory - BOT side - Left

TH0401
TH-NSP
SL-1.1X0.4-1.4X0.7
System Memory - BOT side - Right

TH0410
TH-NSP
SL-1.1X0.4-1.4X0.7
TBT Left - BOT side - North

TH0411
TH-NSP
SL-1.1X0.4-1.4X0.7
TBT Left - BOT side - South

TH0420
TH-NSP
SL-1.1X0.4-1.4X0.7
TBT Right - BOT side - North

TH0421
TH-NSP
SL-1.1X0.4-1.4X0.7
TBT Right - BOT side - South

T208 - TOP side - North

T208 through holes are non-plated... for now

T208 - TOP side - South

TH0440
TH-NSP
SL-1.1X0.4-1.4X0.7
SSD - BOT side - North

TH0441
TH-NSP
SL-1.1X0.4-1.4X0.7
SSD - BOT side - South

TH0450
TH-NSP
SL-1.1X0.4-1.4X0.7
SSD - TOP side - North

TH0451
TH-NSP
SL-1.1X0.4-1.4X0.7
SSD - TOP side - South

TH0460
TH-NSP
SL-1.1X0.4-1.4X0.7
Frame Buffer Memory - BOT side - Left

TH0461
TH-NSP
SL-1.1X0.4-1.4X0.7
Frame Buffer Memory - BOT side - Right

Shield Can Fence

SH0400
SM
SHLD-FENCE-MLB-M8-X379
OMIT_TABLE
DRAM - BOT side
APN 806-06590

SH0410
SM
SHLD-FENCE-MLB-M8-X379
OMIT_TABLE
AR Right - BOT side
APN 806-06586

SH0420
SM
SHLD-FENCE-MLB-M8-X379
OMIT_TABLE
AR Left - BOT side
APN 806-06588

SH0430
SM
SHLD-FENCE-M8-X379
T208 - TOP side
APN 806-07814

SH0440
SM
SHLD-FENCE-MLB-M8-X379
OMIT_TABLE
SSD - TOP side
APN 806-06584

SH0450
SM
SHLD-FENCE-MLB-M8-X379
OMIT_TABLE
SSD - BOT side
APN 806-06585

SH0460
SM
SHLD-FENCE-MLB-M8-X379
OMIT_TABLE
Diplexer - BOT side
APN 806-06591

SH0470
SM
SHLD-FENCE-MLB-M8-X379
OMIT_TABLE
VRAM - BOT side
APN 806-08026

Shield Can Omit Table

PART NUMBER	QTY	DESCRIPTION	REFERENCE DES	CRITICAL	BOM OPTION
806-08023	1	SHIELD,FENCE,DRAM,X378	SH0400	CRITICAL	
806-08019	1	SHIELD,FENCE,ALPINE RIDGE,RIGHT,X378	SH0410	CRITICAL	
806-08021	1	SHIELD,FENCE,ALPINE RIDGE,LEFT,X378	SH0420	CRITICAL	
806-07918	1	SHIELD,NAND,TOP,ALT,X363	SH0440	CRITICAL	
806-07917	1	SHIELD,NAND,BOTTOM,ALT,X363	SH0450	CRITICAL	
806-08024	1	SHIELD,DIPLEX,EG,X378	SH0460	CRITICAL	
806-08026	1	FENCE,VRAM,EG,X378	SH0470	CRITICAL	

BOM_COST_GROUP=MECHANICALS

SYNC_MASTER=J80_MLB SYNC_DATE=11/16/2015

PAGE TITLE
PD Parts

Apple Inc.

DRAWING NUMBER 051-00647 SIZE D
REVISION 10.0.0
BRANCH dvt-fab10
PAGE 4 OF 145
SHEET 4 OF 121

NOTICE OF PROPRIETARY PROPERTY:
THE INFORMATION CONTAINED HEREIN IS THE PROPRIETARY PROPERTY OF APPLE INC.
THE POSESSOR AGREES TO THE FOLLOWING:
I TO MAINTAIN THIS DOCUMENT IN CONFIDENCE
II NOT TO REPRODUCE OR COPY IT
III NOT TO REVEAL OR PUBLISH IT IN WHOLE OR PART
IV ALL RIGHTS RESERVED

WWW.AliSaler.Com

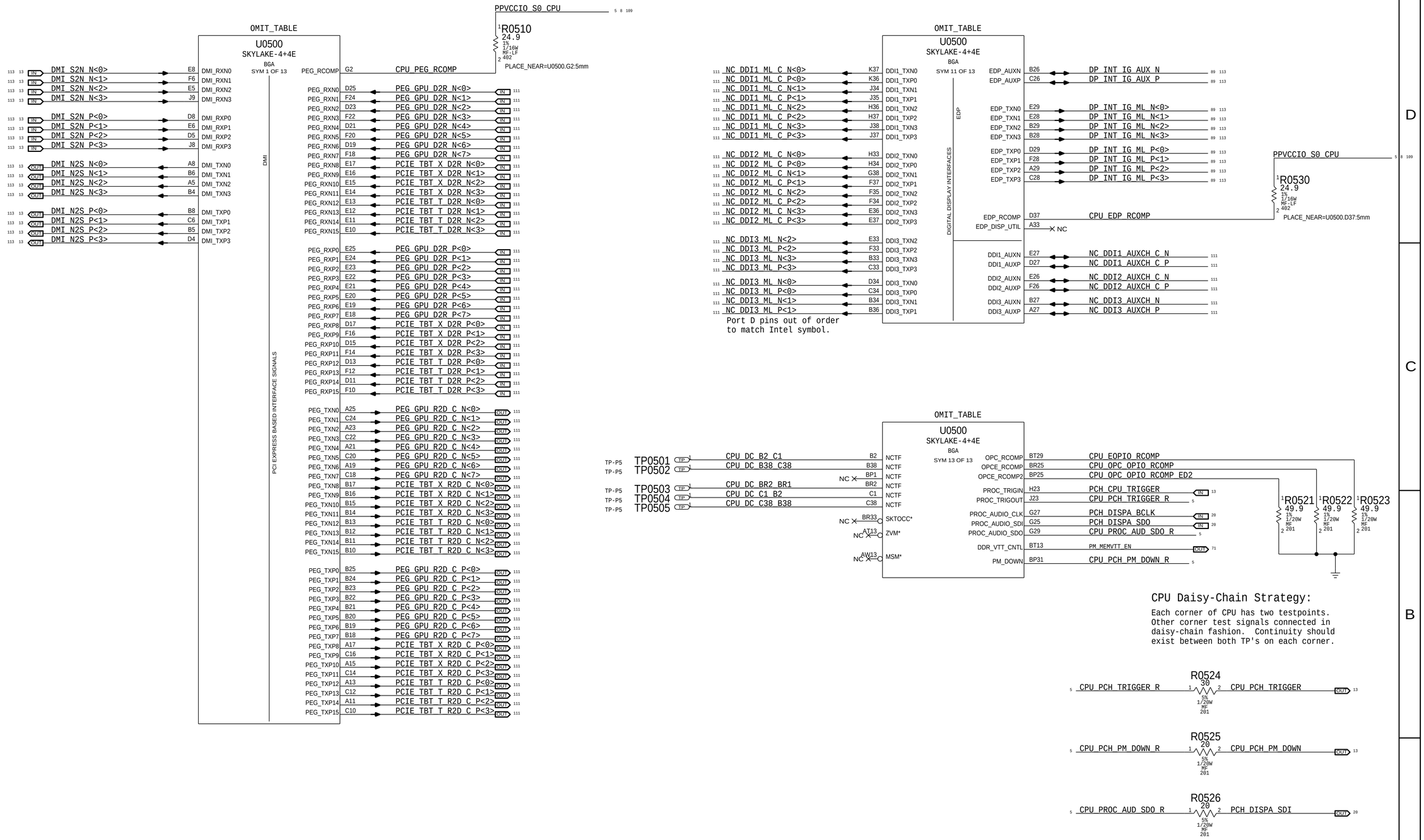

BOM_COST_GROUP=CPU & CHIPSET

PAGE TITLE
CPU DMI/PEG/FDI/RSVD

Apple Inc.

DRAWING NUMBER 051-00647 SIZE D
REVISION 10.0.0
BRANCH dvt-fab10
PAGE 5 OF 145
SHEET 5 OF 121

NOTICE OF PROPRIETARY PROPERTY:
THE INFORMATION CONTAINED HEREIN IS THE PROPRIETARY PROPERTY OF APPLE INC.
THE POSESSOR AGREES TO THE FOLLOWING:
I TO MAINTAIN THIS DOCUMENT IN CONFIDENCE
II NOT TO REPRODUCE OR COPY IT
III NOT TO REVEAL OR PUBLISH IT IN WHOLE OR PART
IV ALL RIGHTS RESERVED

WWW.AliSaler.Com

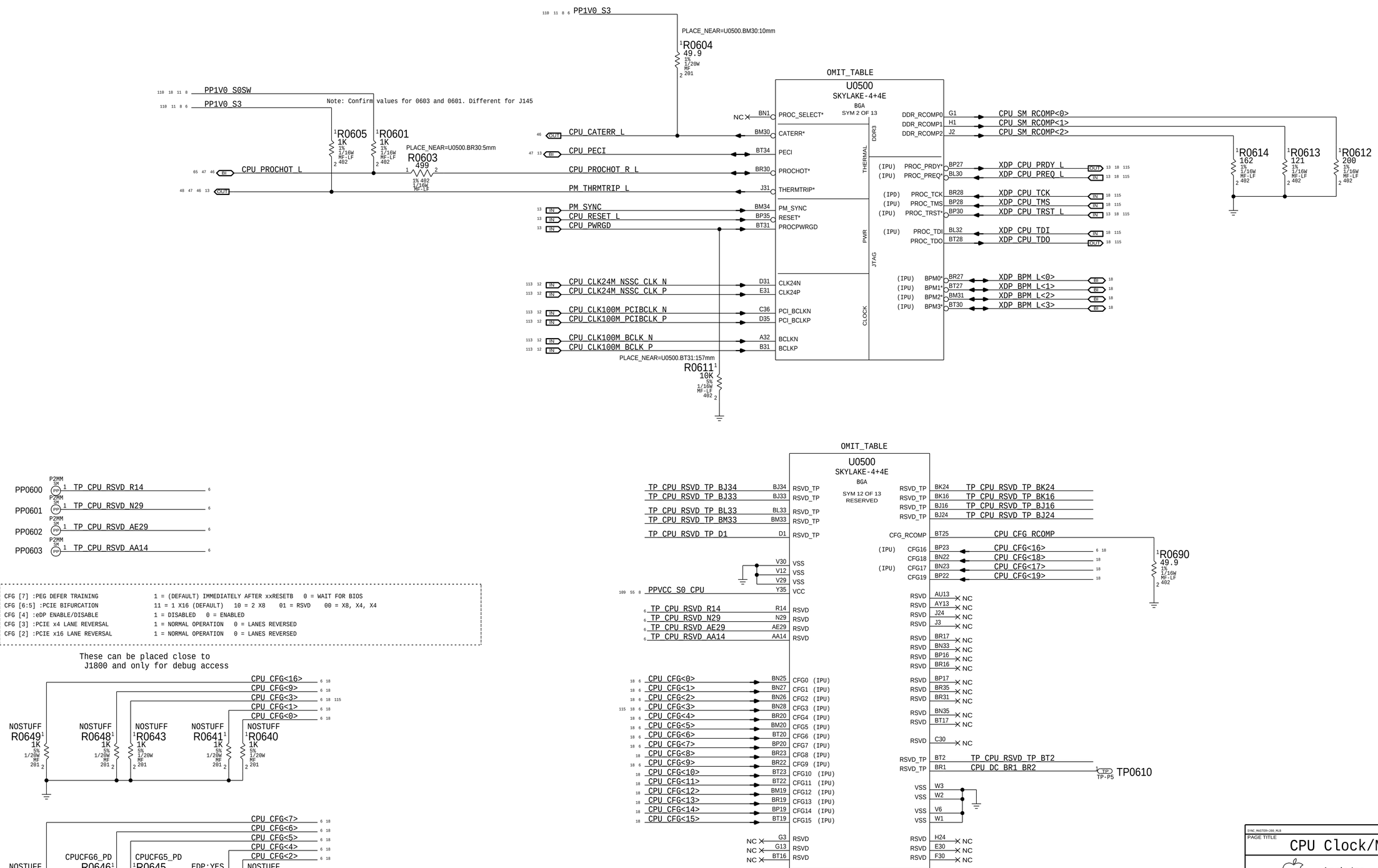

BOM GROUP	BOM OPTIONS
CPUPEG:X8X8	CPUCFG5_PD
CPUPEG:X8X4X4	CPUCFG6_PD,CPUCFG5_PD

To use PEG X16 configuration, simply remove CPUPEG:X8X8 and CPUPEG:X8X4X4 from BOMs.

BOM_COST_GROUP=CPU & CHIPSET

SYNC_MASTER=J80_MLB SYNC_DATE=11/06/2016

PAGE TITLE
CPU Clock/Misc/JTAG/CFG

Apple Inc.

DRAWING NUMBER 051-00647 SIZE D
REVISION 10.0.0
BRANCH dvt-fab10
PAGE 6 OF 145
SHEET 6 OF 121

NOTICE OF PROPRIETARY PROPERTY:
THE INFORMATION CONTAINED HEREIN IS THE PROPRIETARY PROPERTY OF APPLE INC.
THE POSESSOR AGREES TO THE FOLLOWING:
I TO MAINTAIN THIS DOCUMENT IN CONFIDENCE
II NOT TO REPRODUCE OR COPY IT
III NOT TO REVEAL OR PUBLISH IT IN WHOLE OR PART
IV ALL RIGHTS RESERVED

WWW.AliSaler.Com

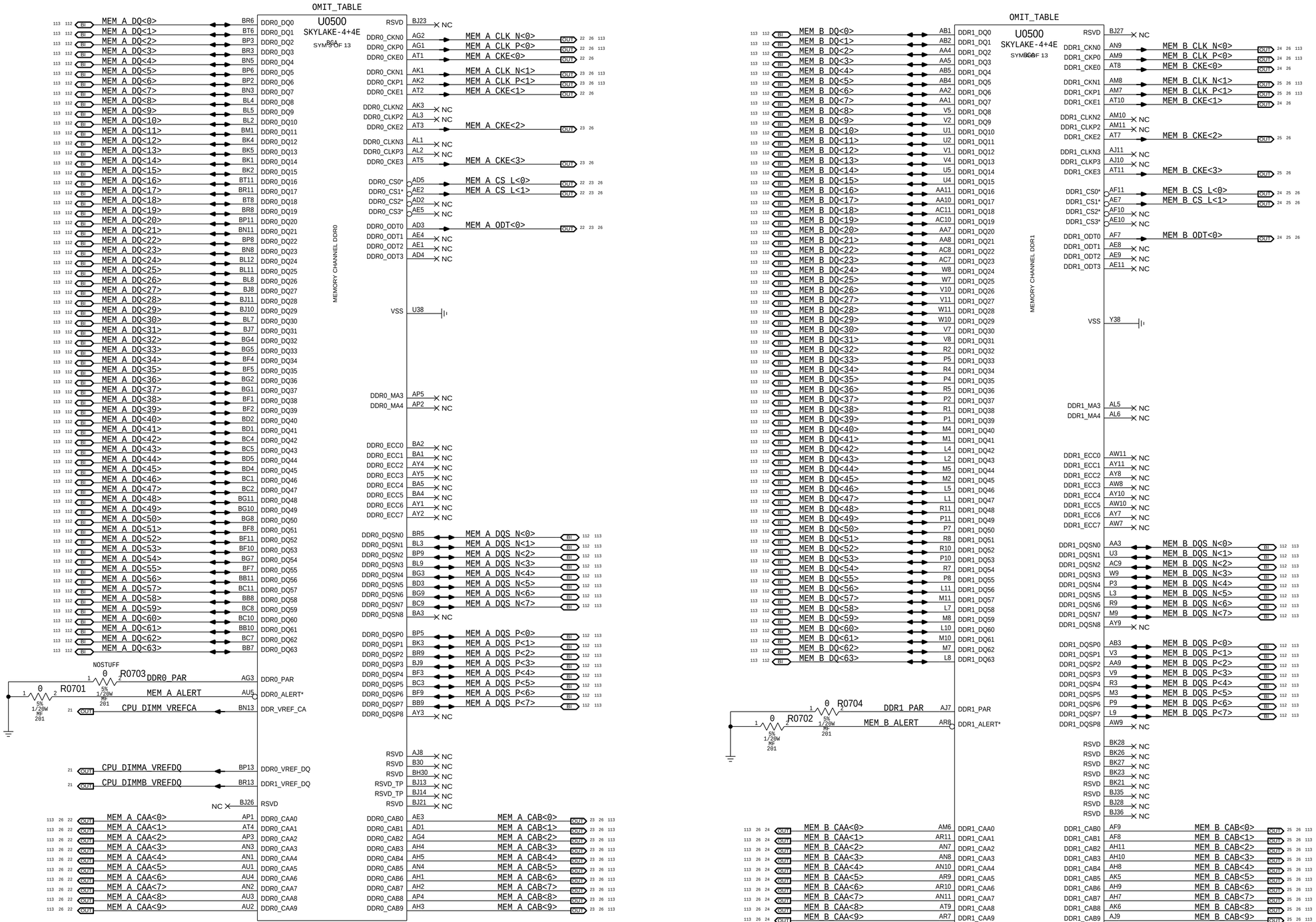

SYNC_MASTER=J80_MLB SYNC_DATE=11/06/2015

PAGE TITLE

CPU DDR3 Interfaces

Apple Inc.

DRAWING NUMBER 051-00647 SIZE D

REVISION 10.0.0

BRANCH dvt-fab10

PAGE 7 OF 145

SHEET 7 OF 121

NOTICE OF PROPRIETARY PROPERTY:
THE INFORMATION CONTAINED HEREIN IS THE PROPRIETARY PROPERTY OF APPLE INC.
THE POSESSOR AGREES TO THE FOLLOWING:
I TO MAINTAIN THIS DOCUMENT IN CONFIDENCE
II NOT TO REPRODUCE OR COPY IT
III NOT TO REVEAL OR PUBLISH IT IN WHOLE OR PART
IV ALL RIGHTS RESERVED

WWW.AliSaler.Com

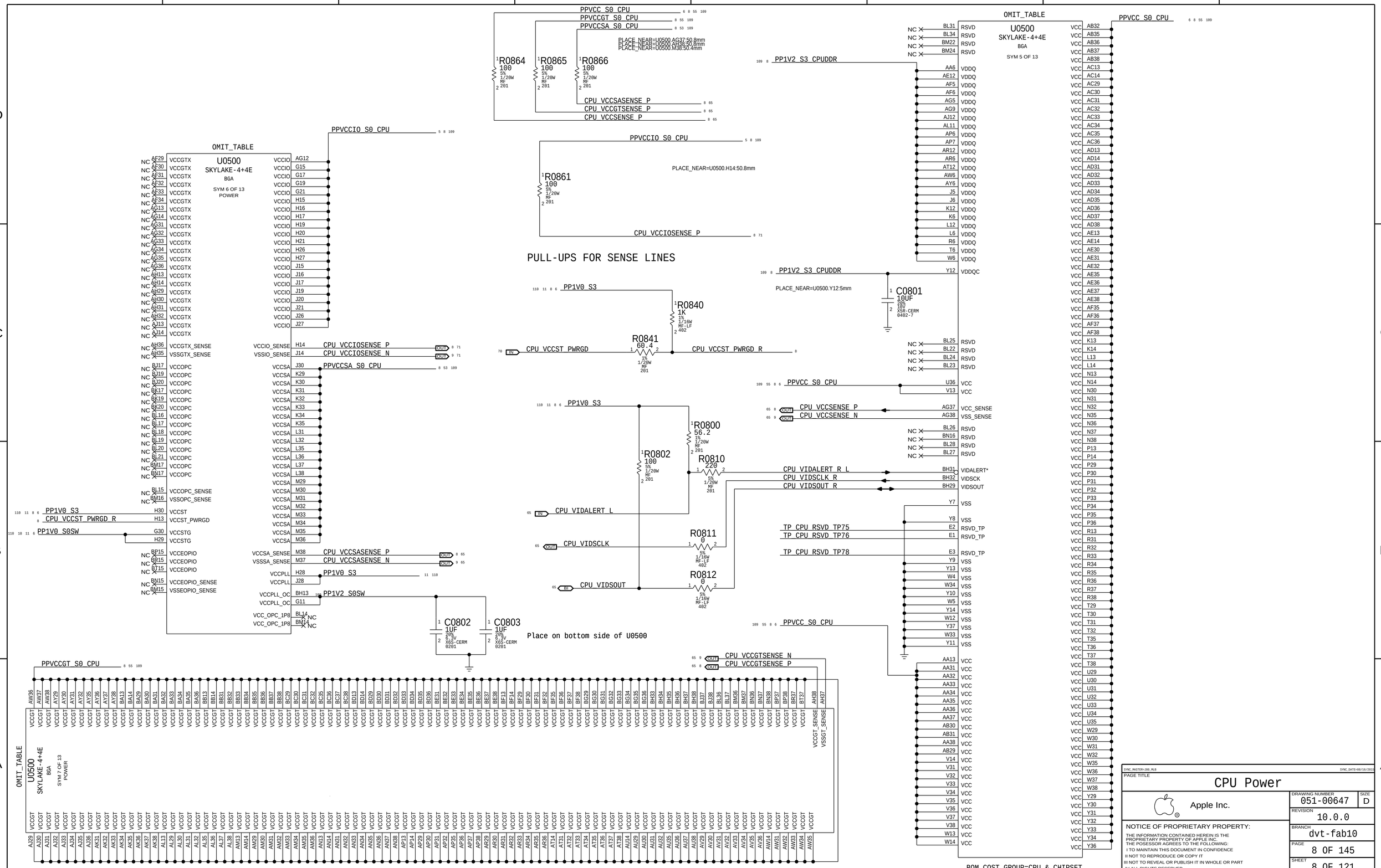

WWW.AliSaler.Com

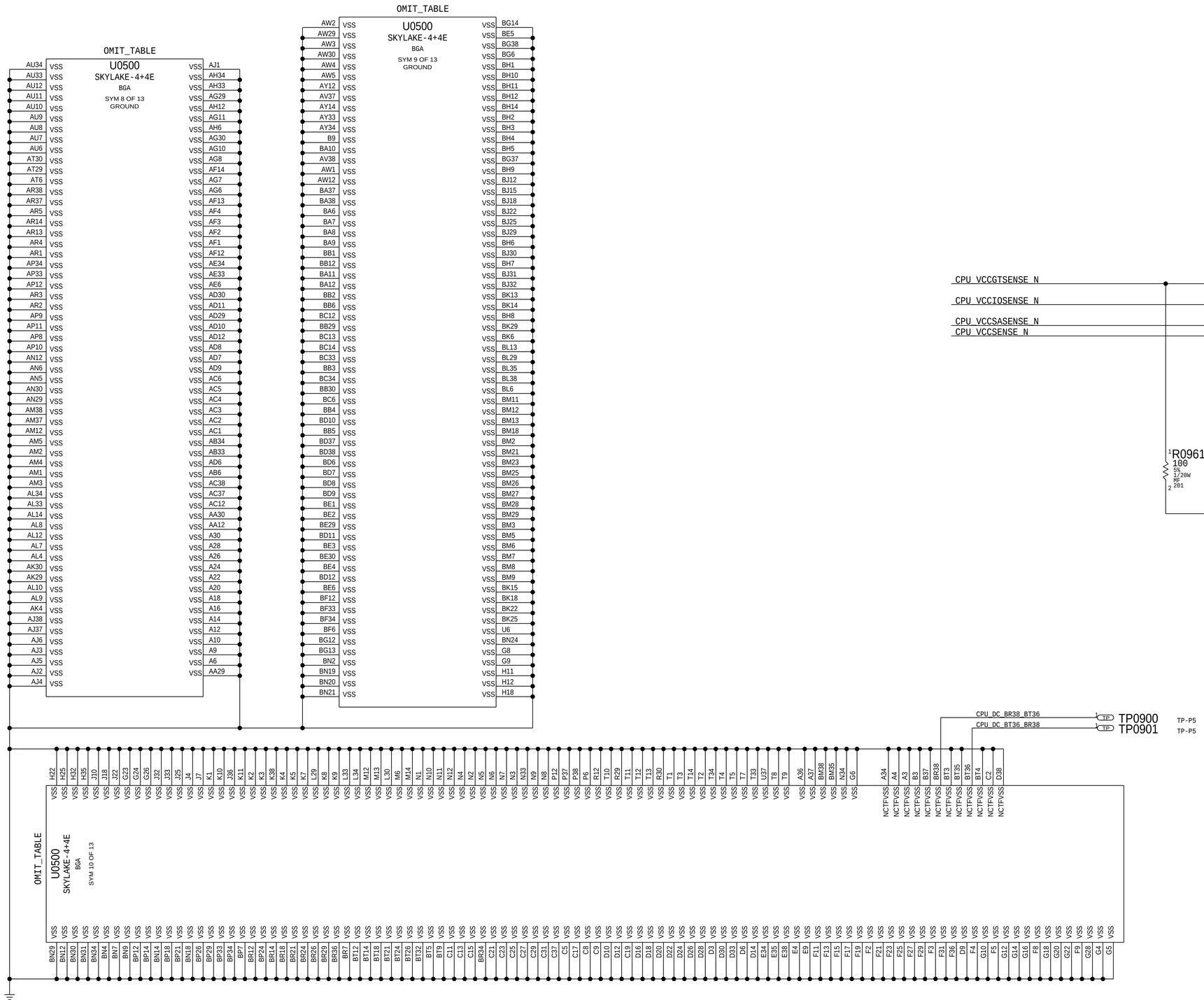

BOM_COST_GROUP=CPU & CHIPSET

SYNC_MASTER=J80_MLB SYNC_DATE=08/17/2015

PAGE TITLE

CPU Ground

Apple Inc.

DRAWING NUMBER	051-00647
SIZE	D
REVISION	10.0.0
BRANCH	dvt-fab10
PAGE	9 OF 145
SHEET	9 OF 121

NOTICE OF PROPRIETARY PROPERTY:
THE INFORMATION CONTAINED HEREIN IS THE PROPRIETARY PROPERTY OF APPLE INC.
THE POSESSOR AGREES TO THE FOLLOWING:
I TO MAINTAIN THIS DOCUMENT IN CONFIDENCE
II NOT TO REPRODUCE OR COPY IT
III NOT TO REVEAL OR PUBLISH IT IN WHOLE OR PART
IV ALL RIGHTS RESERVED

WWW.AliSaler.Com

Vcc CPU Core Decoupling from 20140905 BOM

CPU VCORE Decoupling

Intel recommendation: 5x 220uF ESR 5m ohms ESL 1.9nH each,4x 47uF 0805 8x22uF 0603, 28x 10uF 0402, 3x 10uF 0402, 69x 1uF 0201 Board Edge: 2x 220uF, 4x 47uF rest on the back side
Apple Implementation:

109 PPVCC_S0_CPU

Place on bottom side of U0500

C1000 1UF 20% 4V CERM-X6S 0201
C1001 1UF 20% 4V CERM-X6S 0201
C1002 1UF 20% 4V CERM-X6S 0201
C1003 1UF 20% 4V CERM-X6S 0201
C1004 1UF 20% 4V CERM-X6S 0201
C1005 1UF 20% 4V CERM-X6S 0201
C1006 1UF 20% 4V CERM-X6S 0201
C1007 1UF 20% 4V CERM-X6S 0201
C1008 1UF 20% 4V CERM-X6S 0201
C1009 1UF 20% 4V CERM-X6S 0201
C1010 1UF 20% 4V CERM-X6S 0201
C1011 1UF 20% 4V CERM-X6S 0201
C1012 1UF 20% 4V CERM-X6S 0201
C1013 1UF 20% 4V CERM-X6S 0201
C1014 1UF 20% 4V CERM-X6S 0201
C1015 1UF 20% 4V CERM-X6S 0201
C1016 1UF 20% 4V CERM-X6S 0201
C1017 1UF 20% 4V CERM-X6S 0201
C1018 1UF 20% 4V CERM-X6S 0201
C1019 1UF 20% 4V CERM-X6S 0201
C1020 1UF 20% 4V CERM-X6S 0201
C1021 1UF 20% 4V CERM-X6S 0201
C1022 1UF 20% 4V CERM-X6S 0201

Place on bottom side of U0500

C1023 1UF 20% 4V CERM-X6S 0201
C1024 1UF 20% 4V CERM-X6S 0201
C1025 1UF 20% 4V CERM-X6S 0201
C1026 1UF 20% 4V CERM-X6S 0201
C1027 1UF 20% 4V CERM-X6S 0201
C1028 1UF 20% 4V CERM-X6S 0201
C1029 1UF 20% 4V CERM-X6S 0201
C1030 1UF 20% 4V CERM-X6S 0201
C1031 1UF 20% 4V CERM-X6S 0201
C1032 1UF 20% 4V CERM-X6S 0201
C1033 1UF 20% 4V CERM-X6S 0201
C1034 1UF 20% 4V CERM-X6S 0201
C1035 1UF 20% 4V CERM-X6S 0201
C1036 1UF 20% 4V CERM-X6S 0201
C1037 1UF 20% 4V CERM-X6S 0201
C1038 1UF 20% 4V CERM-X6S 0201
C1039 1UF 20% 4V CERM-X6S 0201
C1040 1UF 20% 4V CERM-X6S 0201
C1041 1UF 20% 4V CERM-X6S 0201
C1042 1UF 20% 4V CERM-X6S 0201
C1043 1UF 20% 4V CERM-X6S 0201
C1044 1UF 20% 4V CERM-X6S 0201
C1045 1UF 20% 4V CERM-X6S 0201

Place on bottom side of U0500

C1046 1UF 20% 4V CERM-X6S 0201
C1047 1UF 20% 4V CERM-X6S 0201
C1048 1UF 20% 4V CERM-X6S 0201
C1049 1UF 20% 4V CERM-X6S 0201
C1050 1UF 20% 4V CERM-X6S 0201
C1051 1UF 20% 4V CERM-X6S 0201
C1052 1UF 20% 4V CERM-X6S 0201
C1053 1UF 20% 4V CERM-X6S 0201
C1054 1UF 20% 4V CERM-X6S 0201
C1055 1UF 20% 4V CERM-X6S 0201
C1056 1UF 20% 4V CERM-X6S 0201
C1057 1UF 20% 4V CERM-X6S 0201
C1058 1UF 20% 4V CERM-X6S 0201
C1059 1UF 20% 4V CERM-X6S 0201
C1060 1UF 20% 4V CERM-X6S 0201
C1061 1UF 20% 4V CERM-X6S 0201
C1062 1UF 20% 4V CERM-X6S 0201

NOSTUFF
C10A0 20UF 20% 2.5V X6S-CERM 0402-1
C10A1 20UF 20% 2.5V X6S-CERM 0402-1
NOSTUFF
C10A2 20UF 20% 2.5V X6S-CERM 0402-1
NOSTUFF
C10A3 20UF 20% 2.5V X6S-CERM 0402-1
C10A4 20UF 20% 2.5V X6S-CERM 0402-1
C10A5 20UF 20% 2.5V X6S-CERM 0402-1
C10A6 20UF 20% 2.5V X6S-CERM 0402-1
C10A7 20UF 20% 2.5V X6S-CERM 0402-1
NOSTUFF
C10A8 20UF 20% 2.5V X6S-CERM 0402-1
NOSTUFF
C10A9 20UF 20% 2.5V X6S-CERM 0402-1
NOSTUFF
C10B0 20UF 20% 2.5V X6S-CERM 0402-1
C10B1 20UF 20% 2.5V X6S-CERM 0402-1
NOSTUFF
C10B2 20UF 20% 2.5V X6S-CERM 0402-1
C10B3 20UF 20% 2.5V X6S-CERM 0402-1
C10B4 20UF 20% 2.5V X6S-CERM 0402-1
C10B5 20UF 20% 2.5V X6S-CERM 0402-1
NOSTUFF
C10B6 20UF 20% 2.5V X6S-CERM 0402-1
NOSTUFF
C10B7 20UF 20% 2.5V X6S-CERM 0402-1
NOSTUFF
C10B8 20UF 20% 2.5V X6S-CERM 0402-1
NOSTUFF
C10B9 20UF 20% 2.5V X6S-CERM 0402-1
C10C0 20UF 20% 2.5V X6S-CERM 0402-1
C10C1 20UF 20% 2.5V X6S-CERM 0402-1
NOSTUFF
C10C3 20UF 20% 2.5V X6S-CERM 0402-1
NOSTUFF
C10C4 20UF 20% 2.5V X6S-CERM 0402-1
NOSTUFF
C10C5 20UF 20% 2.5V X6S-CERM 0402-1
C10C6 20UF 20% 2.5V X6S-CERM 0402-1
C10C7 20UF 20% 2.5V X6S-CERM 0402-1

C10D0 20UF 20% 2.5V X6S-CERM 0402-1
C10D1 20UF 20% 2.5V X6S-CERM 0402-1
C10D2 20UF 20% 2.5V X6S-CERM 0402-1
C10D3 20UF 20% 2.5V X6S-CERM 0402-1
C10D4 20UF 20% 2.5V X6S-CERM 0402-1
NOSTUFF
C10D5 20UF 20% 2.5V X6S-CERM 0402-1
C10D6 20UF 20% 2.5V X6S-CERM 0402-1
C10D7 20UF 20% 2.5V X6S-CERM 0402-1
NOSTUFF
C10E0 20UF 20% 2.5V X6S-CERM 0402-1
NOSTUFF
C10E1 20UF 20% 2.5V X6S-CERM 0402-1
NOSTUFF
C10E2 20UF 20% 2.5V X6S-CERM 0402-1
NOSTUFF
C10E3 20UF 20% 2.5V X6S-CERM 0402-1

Noise Floor caps

C10N1 12PF 5% 25V NP0-C0G 0201
C10N2 12PF 5% 25V NP0-C0G 0201
C10N3 12PF 5% 25V NP0-C0G 0201
C10N4 12PF 5% 25V NP0-C0G 0201
C10N5 12PF 5% 25V NP0-C0G 0201
C10N6 12PF 5% 25V NP0-C0G 0201
C10N7 12PF 5% 25V NP0-C0G 0201

Place near inductors on bottom side.

NOSTUFF
C10Z1 20UF 20% 2.5V X6S-CERM 0402-1
C10Z2 20UF 20% 2.5V X6S-CERM 0402-1
C10Z3 20UF 20% 2.5V X6S-CERM 0402-1
C10Z4 20UF 20% 2.5V X6S-CERM 0402-1
C10Z5 20UF 20% 2.5V X6S-CERM 0402-1
NOSTUFF
C10Z6 20UF 20% 2.5V X6S-CERM 0402-1
NOSTUFF
C10Z7 20UF 20% 2.5V X6S-CERM 0402-1
NOSTUFF
C10Z8 20UF 20% 2.5V X6S-CERM 0402-1
NOSTUFF
C10Z9 20UF 20% 2.5V X6S-CERM 0402-1
NOSTUFF
C10ZA 20UF 20% 2.5V X6S-CERM 0402-1
NOSTUFF
C10ZB 20UF 20% 2.5V X6S-CERM 0402-1
NOSTUFF
C10ZC 20UF 20% 2.5V X6S-CERM 0402-1

C1068 220UF 20% 2V ELEC SM-COMBO
C1069 220UF 20% 2V ELEC SM-COMBO
C1070 220UF 20% 2V ELEC SM-COMBO
C1071 220UF 20% 2V ELEC SM-COMBO
C1072 220UF 20% 2V ELEC SM-COMBO
C1073 220UF 20% 2V ELEC SM-COMBO

116 109 PP1V2_S3_CPUDDR

Place on bottom side of U0500.

C1080 20UF 20% 2.5V X6S-CERM 0402-1
C1081 20UF 20% 2.5V X6S-CERM 0402-1
C1082 20UF 20% 2.5V X6S-CERM 0402-1
C1083 20UF 20% 2.5V X6S-CERM 0402-1
C1084 20UF 20% 2.5V X6S-CERM 0402-1
C1085 20UF 20% 2.5V X6S-CERM 0402-1

Place on bottom side of U0500

C1090 20UF 20% 2.5V X6S-CERM 0402-1
C1091 20UF 20% 2.5V X6S-CERM 0402-1
C1092 20UF 20% 2.5V X6S-CERM 0402-1
C1093 20UF 20% 2.5V X6S-CERM 0402-1
C1094 20UF 20% 2.5V X6S-CERM 0402-1
C1095 20UF 20% 2.5V X6S-CERM 0402-1

CPU VDDQ Decoupling

Intel recommendation: 10x 10uF 0402, 4x 22uF 0602
Apple Implementation:

CPU VCCIO Decoupling

Intel recommendation: 3x 10uF 0402 (opposite CPU)
Apple Implementation:

Place near U0500 one bottom side about U0500 side bottom side

109 PPVCCIO_S0_CPU

C1086 20UF 20% 2.5V X6S-CERM 0402-1
C1087 20UF 20% 2.5V X6S-CERM 0402-1
C1088 20UF 20% 2.5V X6S-CERM 0402-1
C1089 20UF 20% 2.5V X6S-CERM 0402-1
C108A 20UF 20% 2.5V X6S-CERM 0402-1

NOTE: Intel decoupling recommendations from CBR schematics for Skylake H doc#557227 and PDG section 48.1 (document# 546884)

BOM_COST_GROUP=CPU & CHIPSET

PAGE TITLE	CPU Decoupling 1 [10]
Apple Inc.	DRAWING NUMBER 051-00647 SIZE D
	REVISION 10.0.0
	BRANCH dvt-fab10
	PAGE 10 OF 145
	SHEET 10 OF 121

NOTICE OF PROPRIETARY PROPERTY:
THE INFORMATION CONTAINED HEREIN IS THE PROPRIETARY PROPERTY OF APPLE INC.
THE POSSESSOR AGREES TO THE FOLLOWING:
I TO MAINTAIN THIS DOCUMENT IN CONFIDENCE
II NOT TO REPRODUCE OR COPY IT
III NOT TO REVEAL OR PUBLISH IT IN WHOLE OR PART
IV ALL RIGHTS RESERVED

WWW.AliSaler.Com

Vcc GT Slice Core Decoupling from 20140905 BOM

CPU VGTSlice Decoupling

Intel recommendation: 7x 220uF, 6x 47uF 0805, 6x 22uF 0603, 35x 10uF 0402, 68 1uF 0201
Apple Implementation:

Board Edge: 4x220uF, 7x 47uF rest on back side

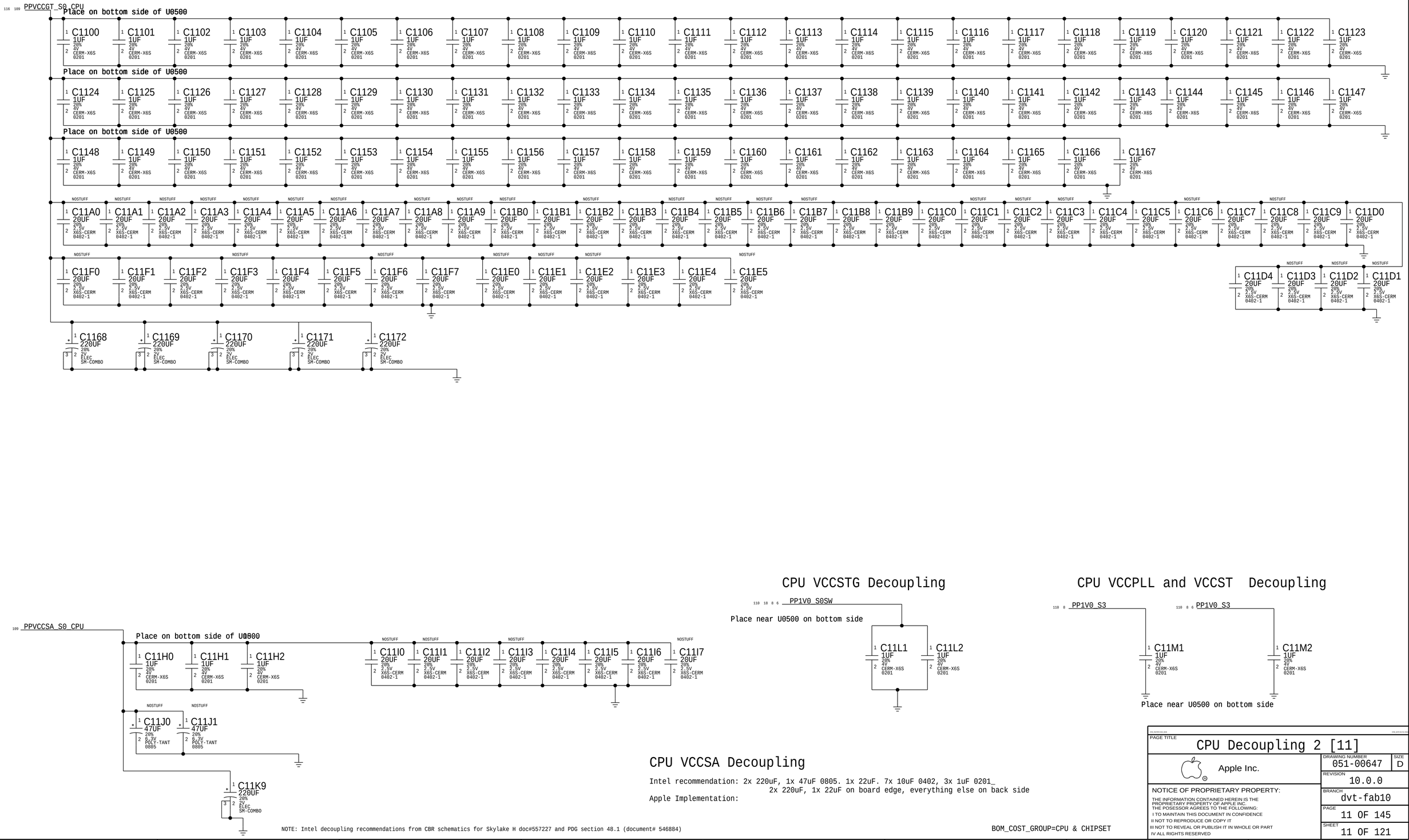

CPU VCCSTG Decoupling

CPU VCCPLL and VCCST Decoupling

CPU VCCSA Decoupling

Intel recommendation: 2x 220uF, 1x 47uF 0805. 1x 22uF. 7x 10uF 0402, 3x 1uF 0201_
2x 220uF, 1x 22uF on board edge, everything else on back side
Apple Implementation:

NOTE: Intel decoupling recommendations from CBR schematics for Skylake H doc#557227 and PDG section 48.1 (document# 546884)

BOM_COST_GROUP=CPU & CHIPSET

PAGE TITLE: CPU Decoupling 2 [11]

Apple Inc.

DRAWING NUMBER: 051-00647 SIZE: D
REVISION: 10.0.0
BRANCH: dvt-fab10
PAGE: 11 OF 145
SHEET: 11 OF 121

NOTICE OF PROPRIETARY PROPERTY:
THE INFORMATION CONTAINED HEREIN IS THE PROPRIETARY PROPERTY OF APPLE INC.
THE POSESSOR AGREES TO THE FOLLOWING:
I TO MAINTAIN THIS DOCUMENT IN CONFIDENCE
II NOT TO REPRODUCE OR COPY IT
III NOT TO REVEAL OR PUBLISH IT IN WHOLE OR PART
IV ALL RIGHTS RESERVED

WWW.AliSaler.Com

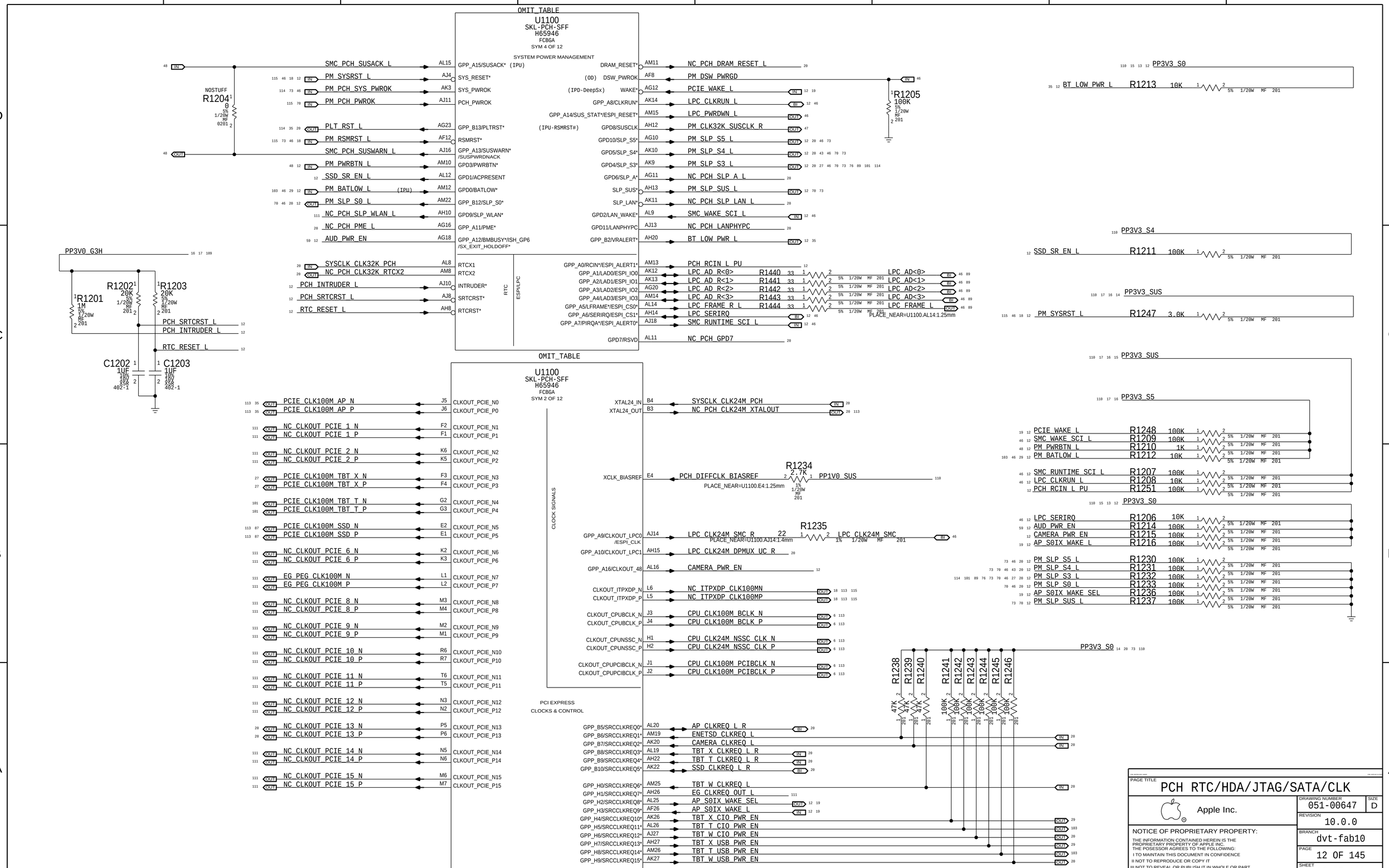

WWW.AliSaler.Com

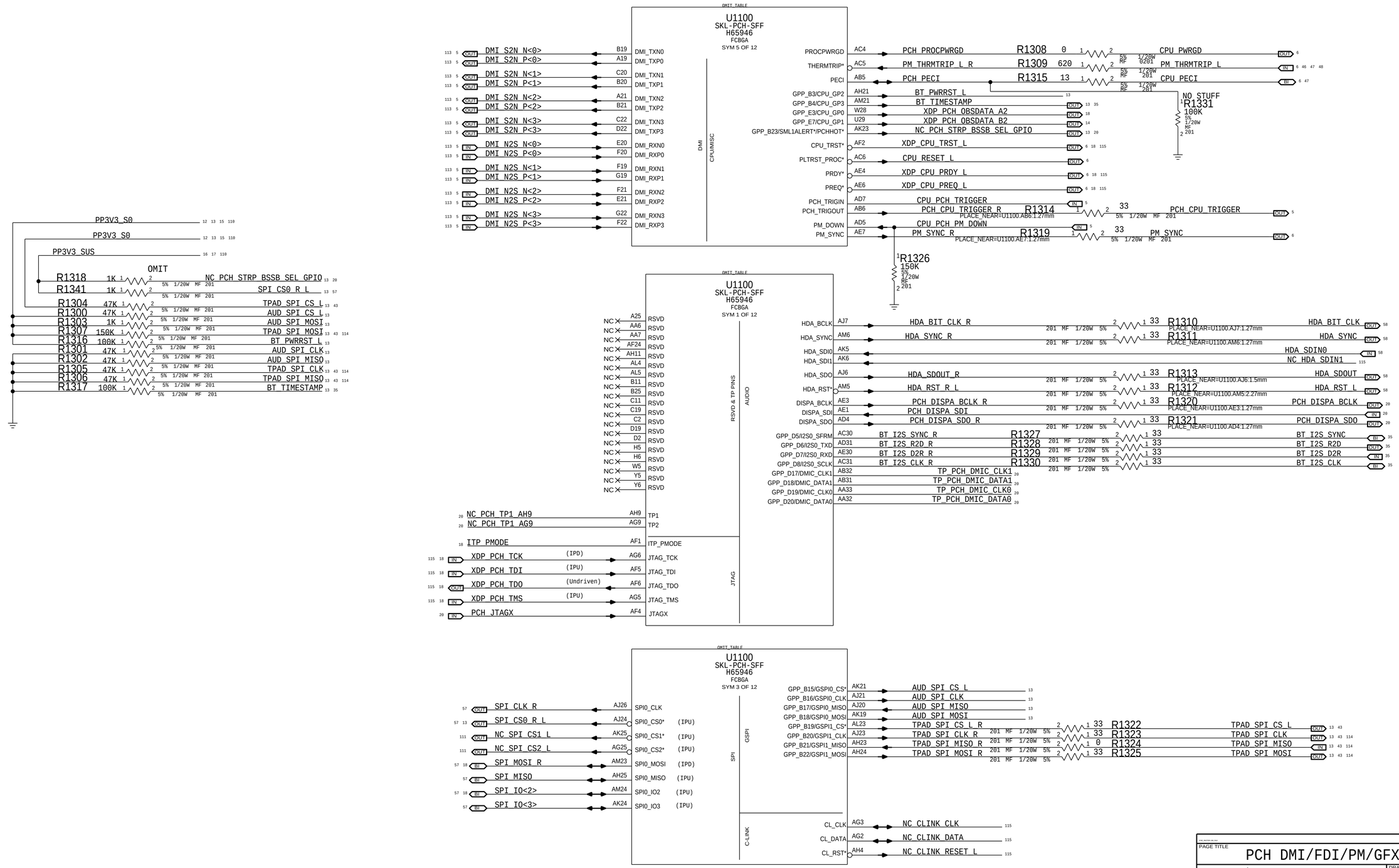

BOM_COST_GROUP=CPU & CHIPSET

PAGE TITLE
PCH DMI/FDI/PM/GFX/PCI

Apple Inc.

DRAWING NUMBER 051-00647 SIZE D
REVISION 10.0.0
BRANCH dvt-fab10
PAGE 13 OF 145
SHEET 13 OF 121

NOTICE OF PROPRIETARY PROPERTY:
THE INFORMATION CONTAINED HEREIN IS THE PROPRIETARY PROPERTY OF APPLE INC.
THE POSESSOR AGREES TO THE FOLLOWING:
I TO MAINTAIN THIS DOCUMENT IN CONFIDENCE
II NOT TO REPRODUCE OR COPY IT
III NOT TO REVEAL OR PUBLISH IT IN WHOLE OR PART
IV ALL RIGHTS RESERVED

WWW.AliSaler.Com

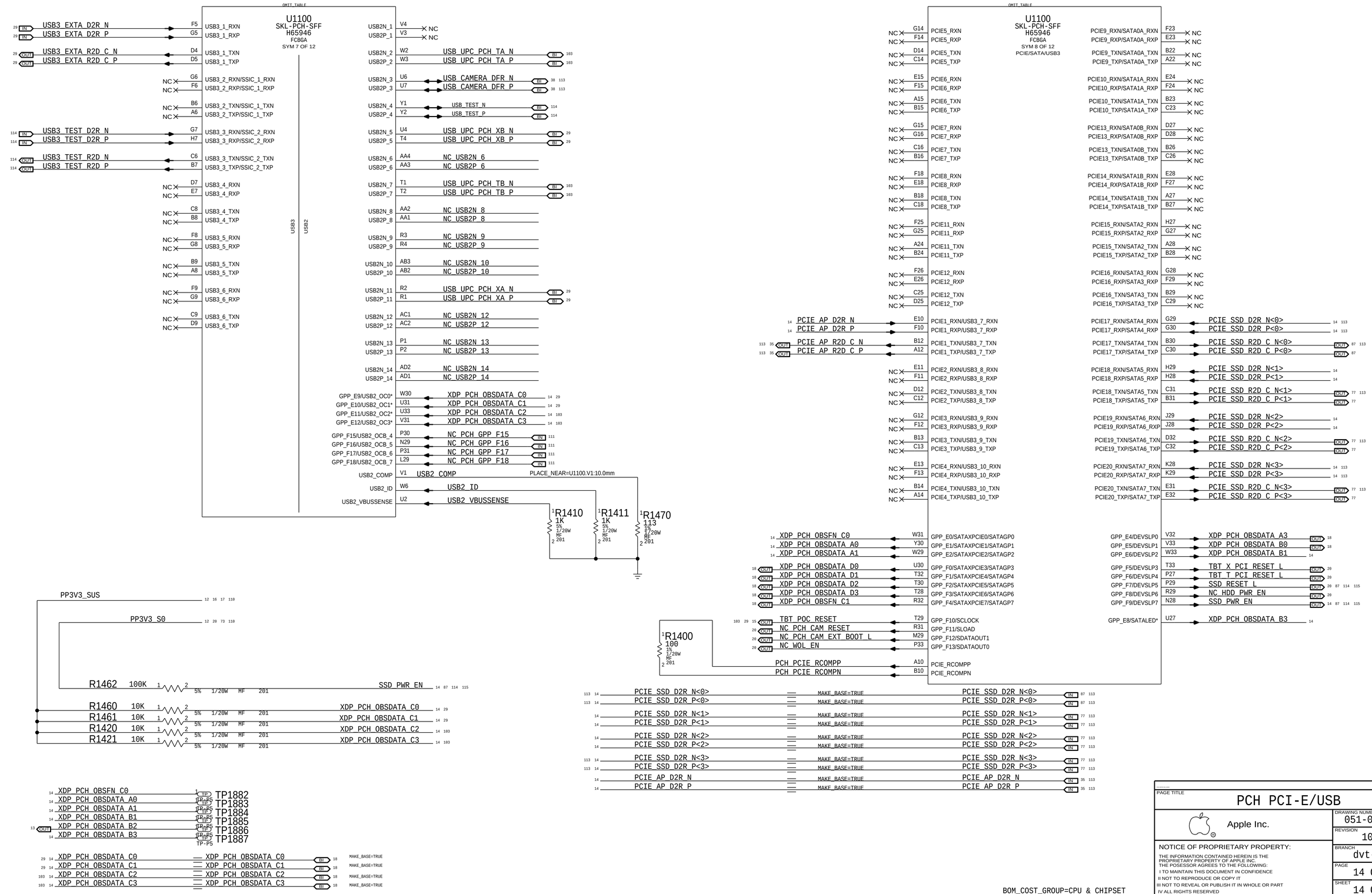

PAGE TITLE

PCH PCI-E/USB

Apple Inc.

DRAWING NUMBER 051-00647 | SIZE D

REVISION 10.0.0

BRANCH dvt-fab10

PAGE 14 OF 145

SHEET 14 OF 121

NOTICE OF PROPRIETARY PROPERTY:

THE INFORMATION CONTAINED HEREIN IS THE PROPRIETARY PROPERTY OF APPLE INC.
THE POSESSOR AGREES TO THE FOLLOWING:
I TO MAINTAIN THIS DOCUMENT IN CONFIDENCE
II NOT TO REPRODUCE OR COPY IT
III NOT TO REVEAL OR PUBLISH IT IN WHOLE OR PART
IV ALL RIGHTS RESERVED

WWW.AliSaler.Com

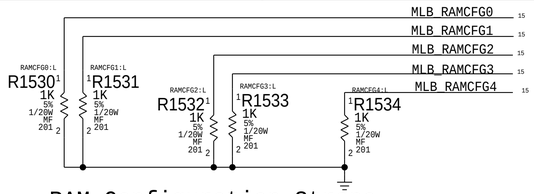

RAM Configuration Straps

BOM GROUP	BOM OPTIONS
RAMCFG_SLOT	RAMCFG4:L,RAMCFG3:L,RAMCFG2:L,RAMCFG1:L,RAMCFG0:L

PART#	QTY	DESCRIPTION	REFERENCE DESIGNATOR(S)	BOM OPTION
117S0006	0	RES,MF,1/20W,1KOHM,5%,0201,SMD		BOARD_ID:1F
117S0006	1	RES,MF,1/20W,1KOHM,5%,0201,SMD	R1540	BOARD_ID:1E
117S0006	1	RES,MF,1/20W,1KOHM,5%,0201,SMD	R1541	BOARD_ID:1D
117S0006	2	RES,MF,1/20W,1KOHM,5%,0201,SMD	R1541,R1540	BOARD_ID:1C
117S0006	1	RES,MF,1/20W,1KOHM,5%,0201,SMD	R1542	BOARD_ID:1B
117S0006	2	RES,MF,1/20W,1KOHM,5%,0201,SMD	R1542,R1540	BOARD_ID:1A
117S0006	2	RES,MF,1/20W,1KOHM,5%,0201,SMD	R1542,R1541	BOARD_ID:19
117S0006	3	RES,MF,1/20W,1KOHM,5%,0201,SMD	R1542,R1541,R1540	BOARD_ID:18
117S0006	1	RES,MF,1/20W,1KOHM,5%,0201,SMD	R1543	BOARD_ID:17
117S0006	2	RES,MF,1/20W,1KOHM,5%,0201,SMD	R1543,R1540	BOARD_ID:16
117S0006	2	RES,MF,1/20W,1KOHM,5%,0201,SMD	R1543,R1541	BOARD_ID:15
117S0006	3	RES,MF,1/20W,1KOHM,5%,0201,SMD	R1543,R1541,R1540	BOARD_ID:14

PROTO 0 = 0x1F = 1 1 1 1 1 (-01 PCB)
PROTO 0B = 0x1E = 1 1 1 1 0 (-02 PCB)
PROTO 1 = 0x1D = 1 1 1 0 1 (-03 PCB)
PROTO 2 = 0x1C = 1 1 1 0 0 (-04 & -05 PCB)
EVT1 = 0x1B = 1 1 0 1 1 (-06 PCB)
EVT2 = 0x1A = 1 1 0 1 0 (-07 PCB)
DVT = 0x19 = 1 1 0 0 1 (-08 PCB)
DVT1-1 = 0x18 = 1 1 0 0 0 (-09 PCB)
PVT = 0x17 = 1 0 1 1 1 (-10 PCB)
0x16 = 1 0 1 1 0
0x15 = 1 0 1 0 1
0x14 = 1 0 1 0 0

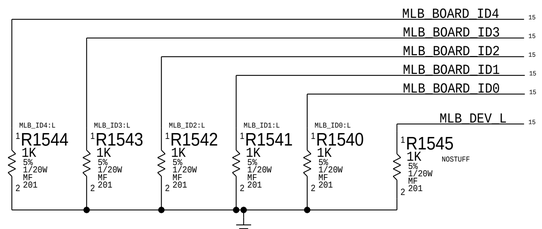

MLB BOARD ID Configuration Straps

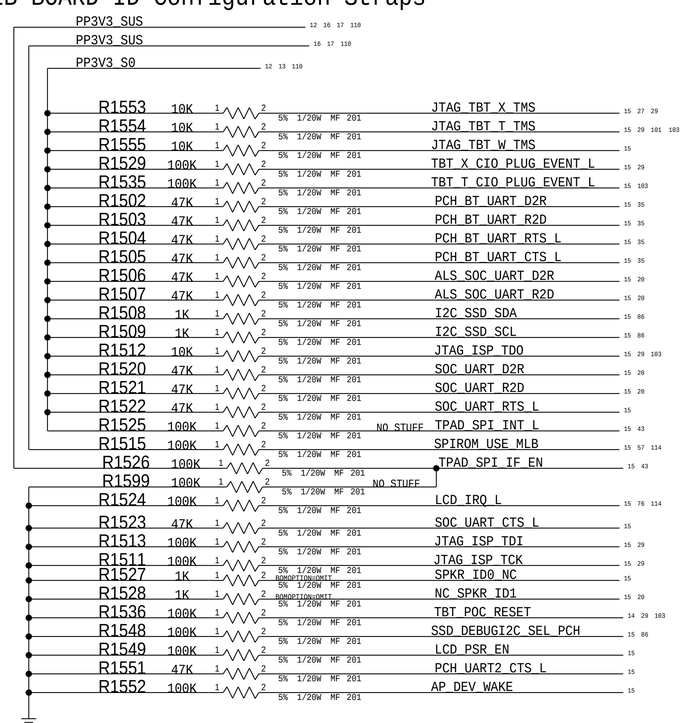

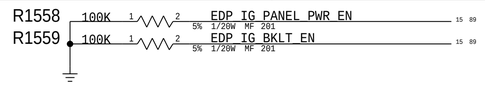

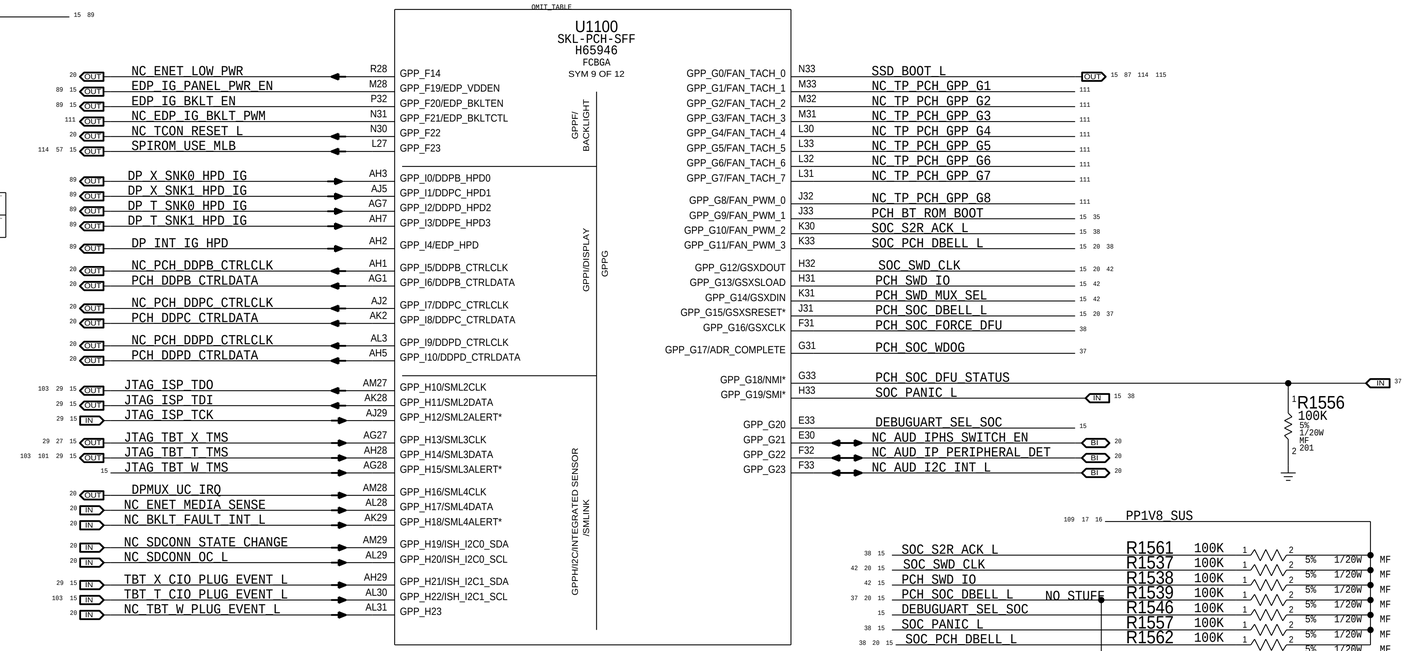

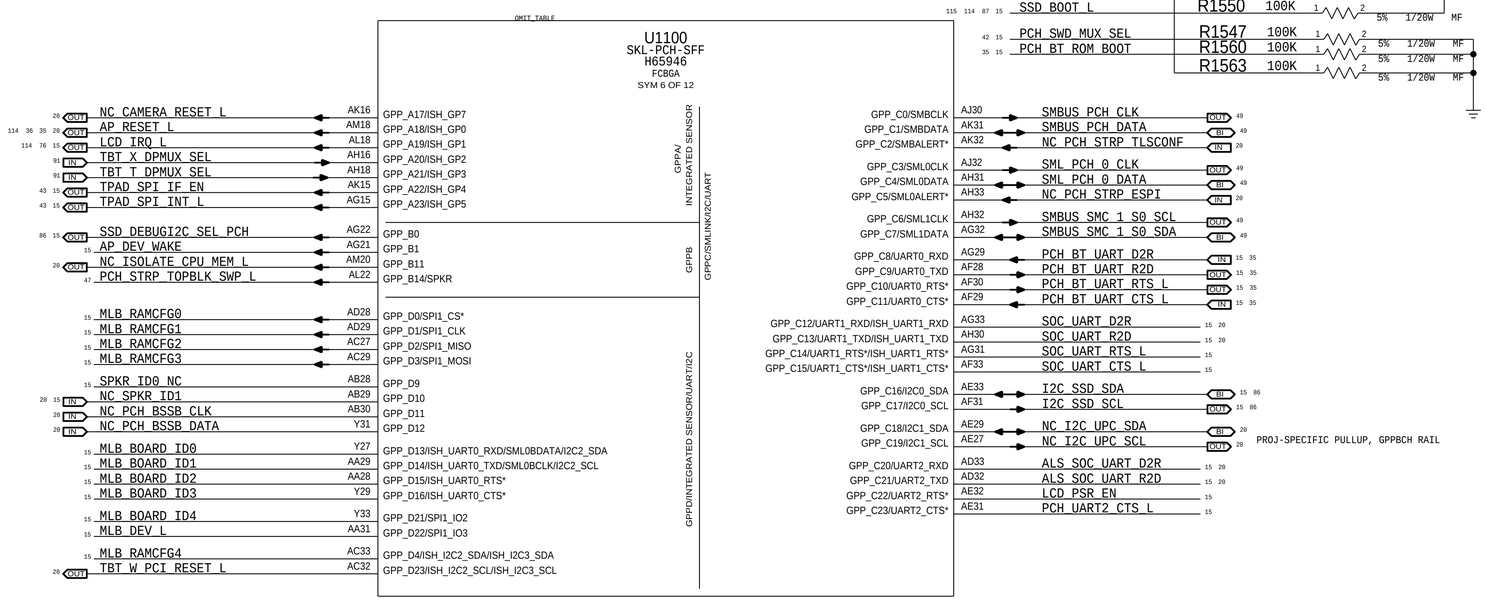

BOM_COST_GROUP=CPU & CHIPSET

PAGE TITLE
PCH GPIO/MISC/NCTF

Apple Inc.

DRAWING NUMBER 051-00647 SIZE D
REVISION 10.0.0
BRANCH dvt-fab10
PAGE 15 OF 145
SHEET 15 OF 121

NOTICE OF PROPRIETARY PROPERTY:
THE INFORMATION CONTAINED HEREIN IS THE PROPRIETARY PROPERTY OF APPLE INC.
THE POSESSOR AGREES TO THE FOLLOWING:
I TO MAINTAIN THIS DOCUMENT IN CONFIDENCE
II NOT TO REPRODUCE OR COPY IT
III NOT TO REVEAL OR PUBLISH IT IN WHOLE OR PART
IV ALL RIGHTS RESERVED

WWW.AliSaler.Com

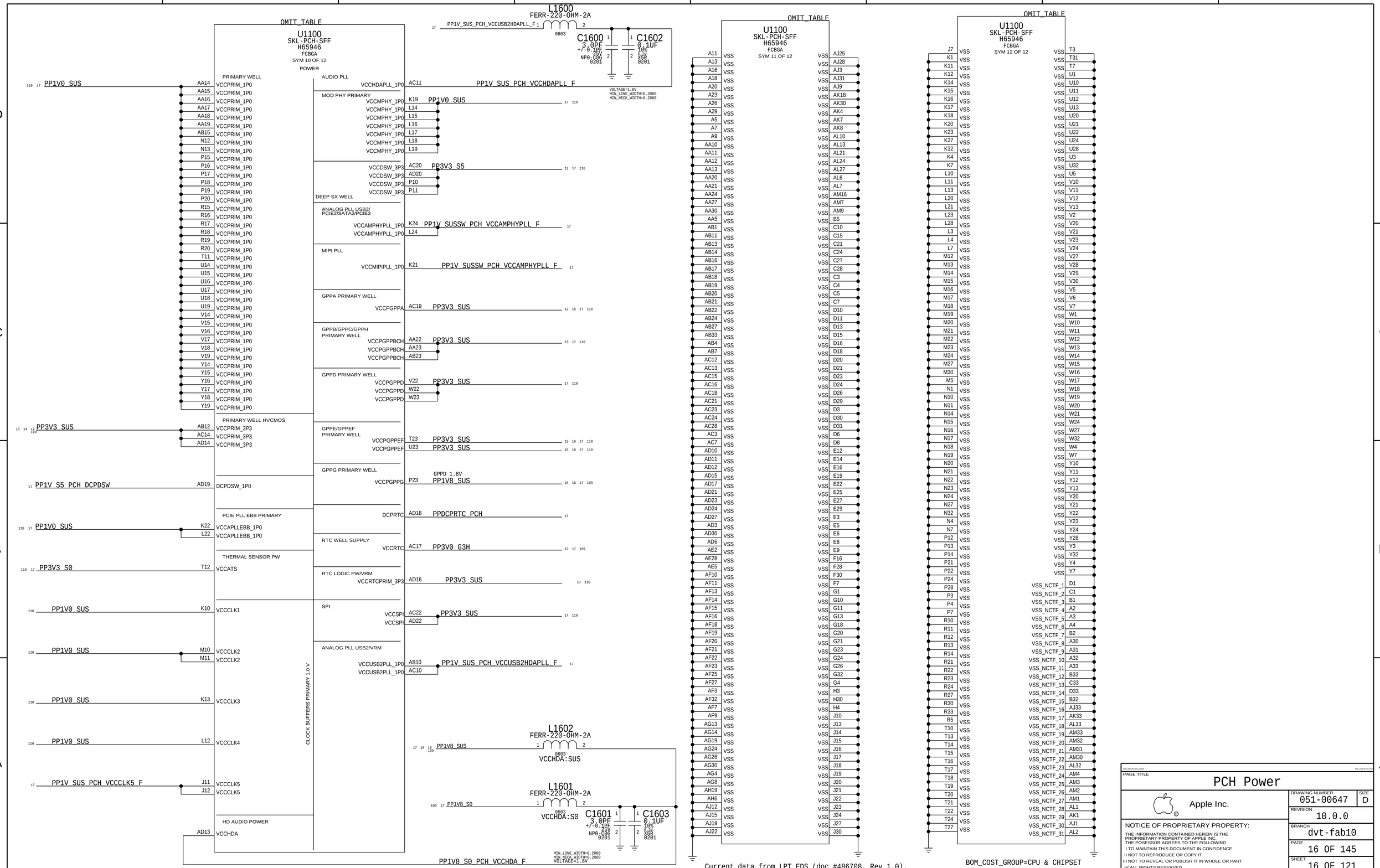

WWW.AliSaler.Com

1000PF CAPS ARE INTEL PLACEHOLDERS & ALL PLACENEAR NEED TO BE UPDATED

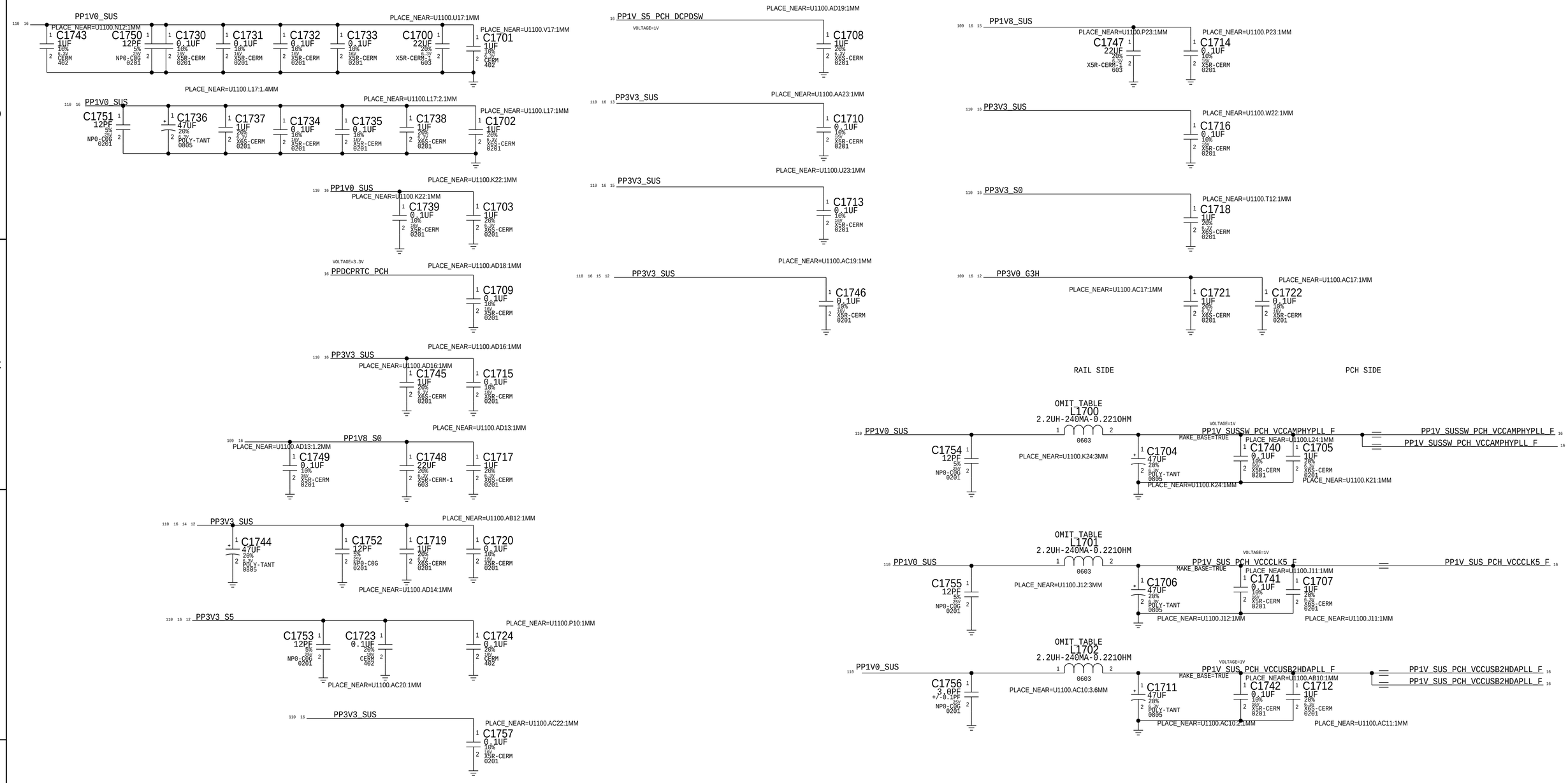

PART NUMBER	QTY	DESCRIPTION	REFERENCE DES	CRITICAL	BOM OPTION
113S0022	3	RES,MF,1A MAX,00HM,5%,0603	L1700,L1701,L1702		

Current data from LPT EDS (doc #486708, Rev 1.0).

BOM_COST_GROUP=CPU & CHIPSET

PAGE TITLE: PCH DECOUPLING

Apple Inc.

DRAWING NUMBER: 051-00647 SIZE: D

REVISION: 10.0.0

BRANCH: dvt-fab10

PAGE: 17 OF 145

SHEET: 17 OF 121

NOTICE OF PROPRIETARY PROPERTY:
THE INFORMATION CONTAINED HEREIN IS THE PROPRIETARY PROPERTY OF APPLE INC.
THE POSESSOR AGREES TO THE FOLLOWING:
I TO MAINTAIN THIS DOCUMENT IN CONFIDENCE
II NOT TO REPRODUCE OR COPY IT
III NOT TO REVEAL OR PUBLISH IT IN WHOLE OR PART
IV ALL RIGHTS RESERVED

WWW.AliSaler.Com

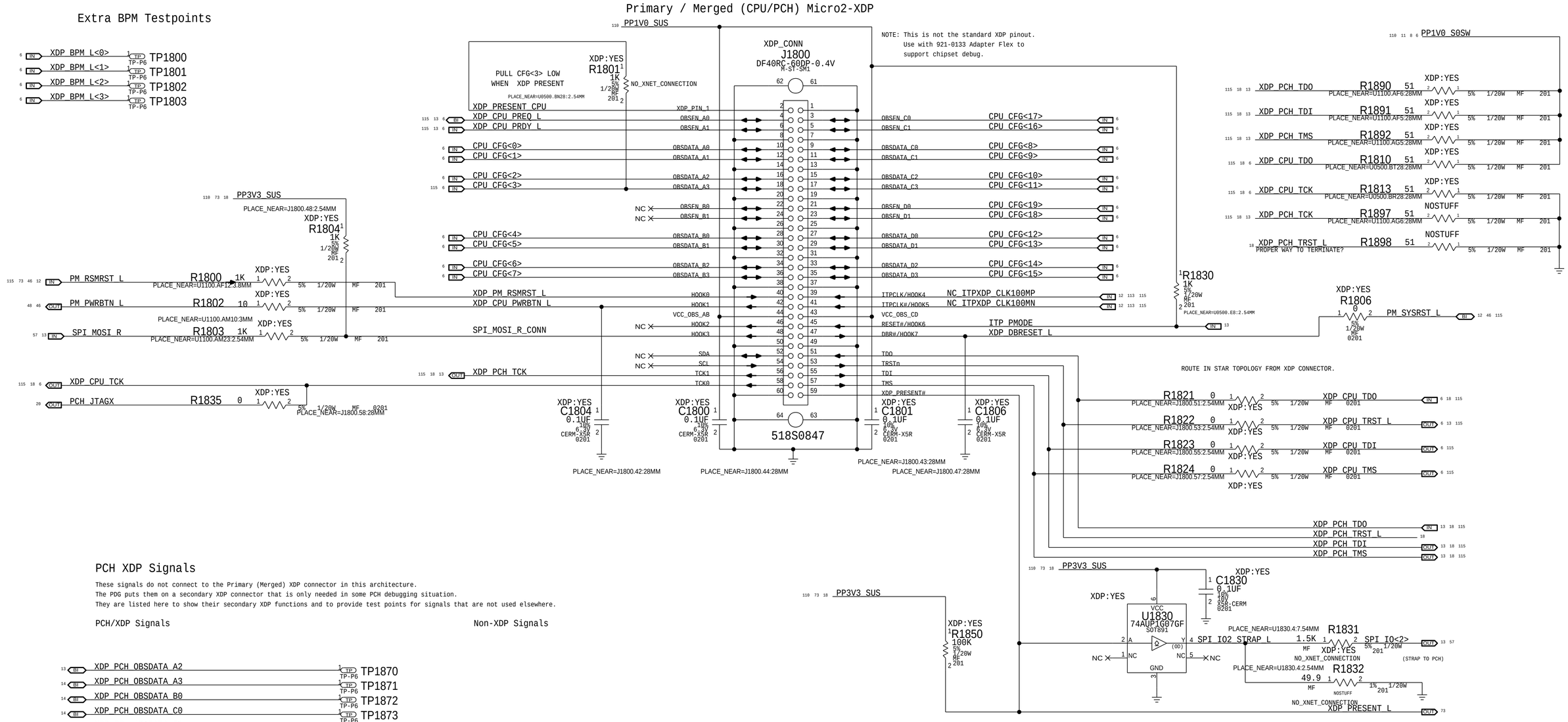

DESIGN: X502/MLB
LAST CHANGE: Mon Jun 15 22:04:28 2015

PAGE TITLE: CPU/PCH Merged XDP

Apple Inc.

DRAWING NUMBER: 051-00647 SIZE: D
REVISION: 10.0.0
BRANCH: dvt-fab10
PAGE: 18 OF 145
SHEET: 18 OF 121

NOTICE OF PROPRIETARY PROPERTY:
THE INFORMATION CONTAINED HEREIN IS THE PROPRIETARY PROPERTY OF APPLE INC.
THE POSESSOR AGREES TO THE FOLLOWING:
I TO MAINTAIN THIS DOCUMENT IN CONFIDENCE
II NOT TO REPRODUCE OR COPY IT
III NOT TO REVEAL OR PUBLISH IT IN WHOLE OR PART
IV ALL RIGHTS RESERVED

WWW.AliSaler.Com

System 32kHz / 12MHz / 24MHz Clock Generator

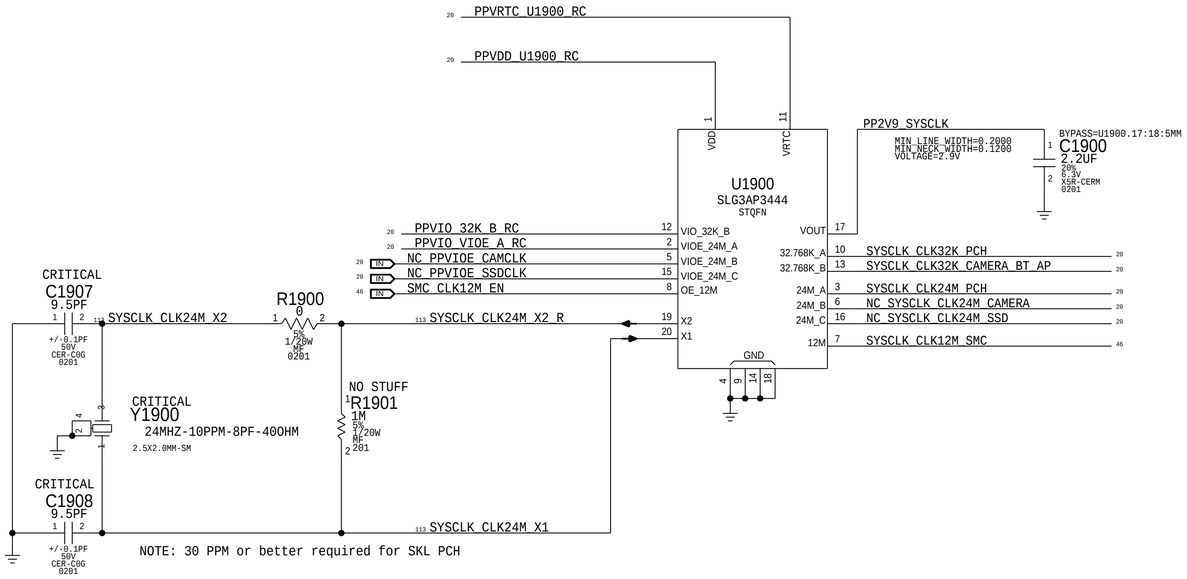

NOTE: 30 PPM or better required for SKL PCH

PCH ME Disable Strap

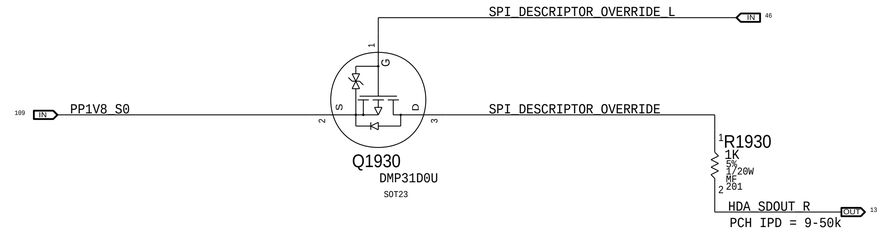

PCH uses HDA_SDO as a power-up strap. If low, ME functions normally.
If high, ME is disabled. This allows for full re-flashing of SPI ROM.
SMC controls strap enable to allow in-field control of strap setting.
***** Circuit does not support HDA voltage >3.3V.

PCIe Wake Muxing

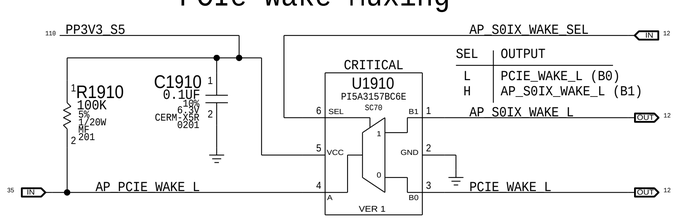

BOM_COST_GROUP=CPU & CHIPSET

PAGE TITLE	Chipset Support 1
	Apple Inc.
DRAWING NUMBER	051-00647
SIZE	D
REVISION	10.0.0
BRANCH	dvt-fab10
PAGE	19 OF 145
SHEET	19 OF 121

NOTICE OF PROPRIETARY PROPERTY:
THE INFORMATION CONTAINED HEREIN IS THE PROPRIETARY PROPERTY OF APPLE INC.
THE POSESSOR AGREES TO THE FOLLOWING:
I TO MAINTAIN THIS DOCUMENT IN CONFIDENCE
II NOT TO REPRODUCE OR COPY IT
III NOT TO REVEAL OR PUBLISH IT IN WHOLE OR PART
IV ALL RIGHTS RESERVED

WWW.AliSaler.Com

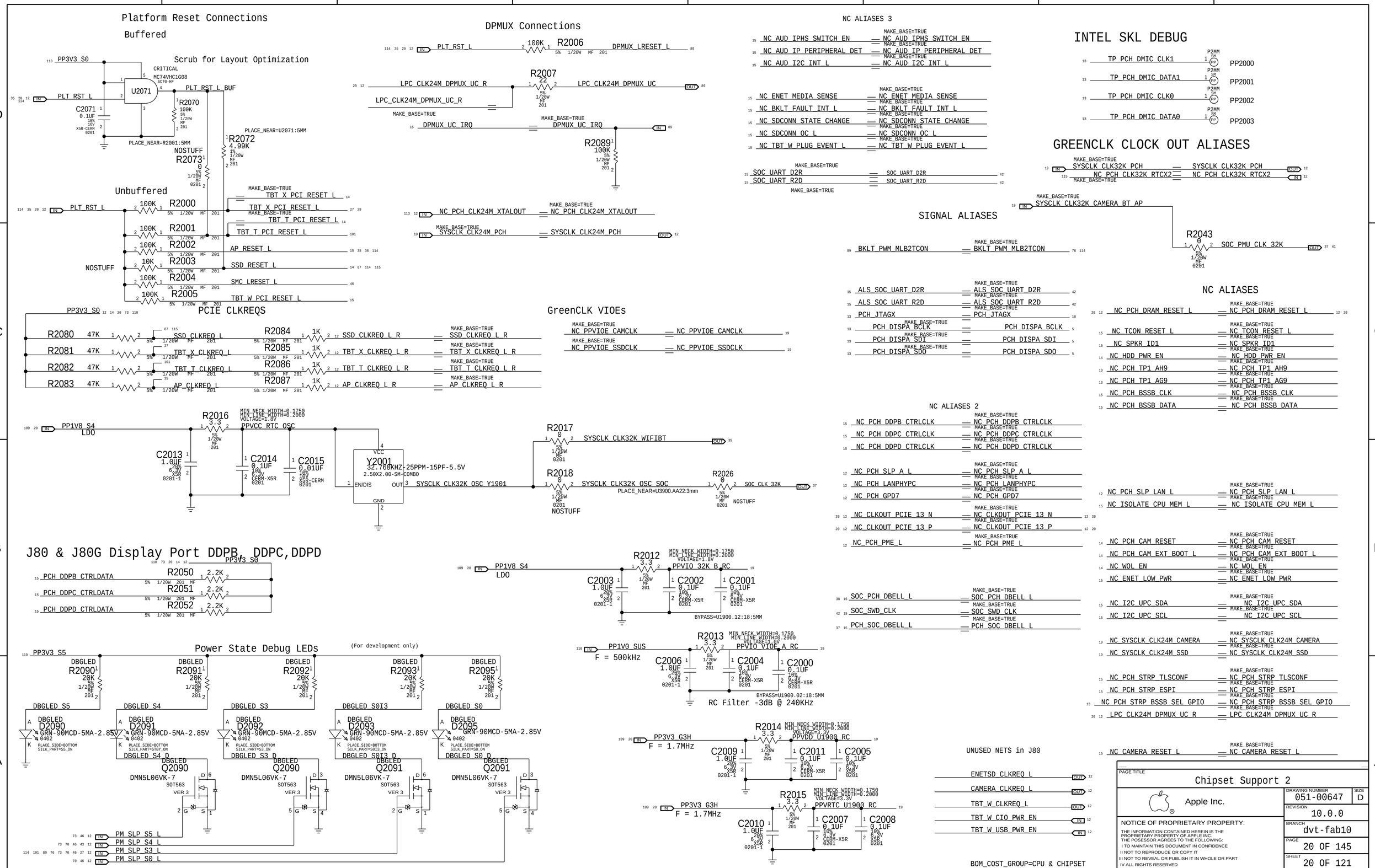

WWW.AliSaler.Com

CPU-Based Margining

NOTE: CPU DAC output step sizes:
DDR3 (1.5V) 7.70mV per step
DDR3L (1.35V) 6.99mV per step
LPDDR3 (1.2V) ?.??mV per step

VRef Dividers

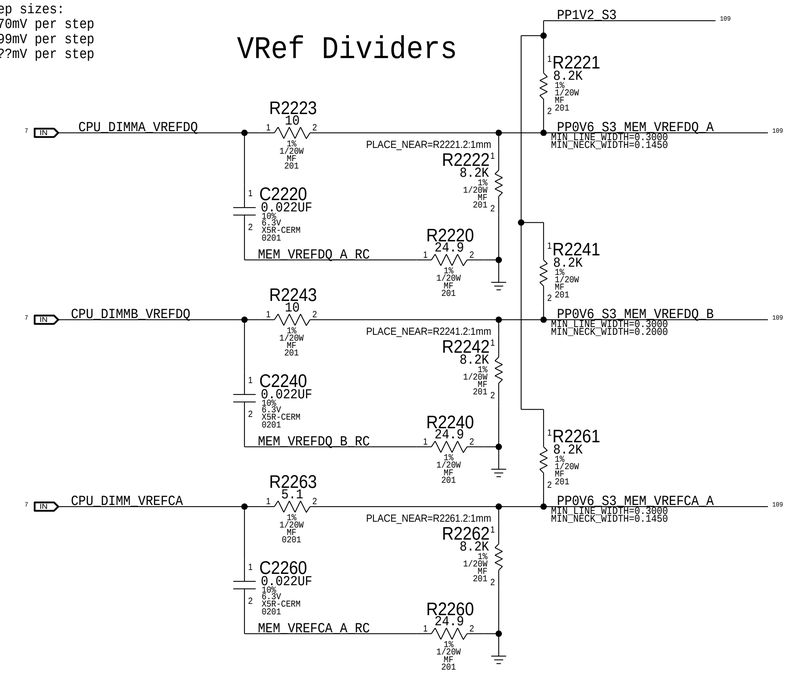

BOM_COST_GROUP=DRAM

SYNC_MASTER=J80_MLB SYNC_DATE=11/06/2015

PAGE TITLE
LPDDR3 VREF MARGINING

Apple Inc.

DRAWING NUMBER 051-00647 SIZE D
REVISION 10.0.0
BRANCH dvt-fab10
PAGE 22 OF 145
SHEET 21 OF 121

NOTICE OF PROPRIETARY PROPERTY:
THE INFORMATION CONTAINED HEREIN IS THE PROPRIETARY PROPERTY OF APPLE INC.
THE POSESSOR AGREES TO THE FOLLOWING:
I TO MAINTAIN THIS DOCUMENT IN CONFIDENCE
II NOT TO REPRODUCE OR COPY IT
III NOT TO REVEAL OR PUBLISH IT IN WHOLE OR PART
IV ALL RIGHTS RESERVED

WWW.AliSaler.Com

LPDDR3 CHANNEL A (0-31)

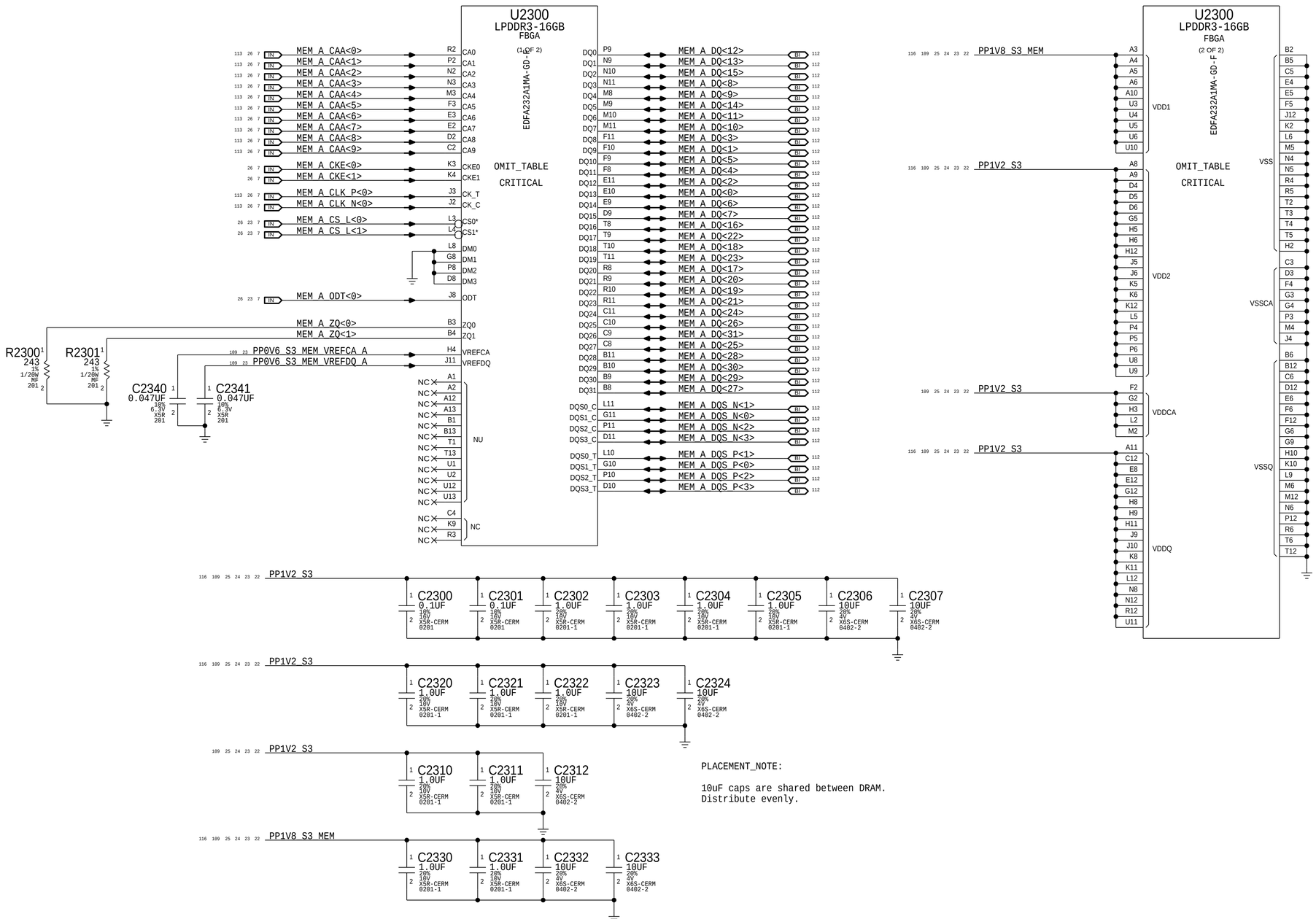

PLACEMENT_NOTE:

10uF caps are shared between DRAM.
Distribute evenly.

BOM_COST_GROUP=DRAM

SYNC_MASTER=J80_MLB SYNC_DATE=11/06/2015

PAGE TITLE
LPDDR3 DRAM Channel A (0-31)

Apple Inc.

DRAWING NUMBER	051-00647
SIZE	D
REVISION	10.0.0
BRANCH	dvt-fab10
PAGE	23 OF 145
SHEET	22 OF 121

NOTICE OF PROPRIETARY PROPERTY:
THE INFORMATION CONTAINED HEREIN IS THE PROPRIETARY PROPERTY OF APPLE INC.
THE POSESSOR AGREES TO THE FOLLOWING:
I TO MAINTAIN THIS DOCUMENT IN CONFIDENCE
II NOT TO REPRODUCE OR COPY IT
III NOT TO REVEAL OR PUBLISH IT IN WHOLE OR PART
IV ALL RIGHTS RESERVED

WWW.AliSaler.Com

LPDDR3 CHANNEL A (32-63)

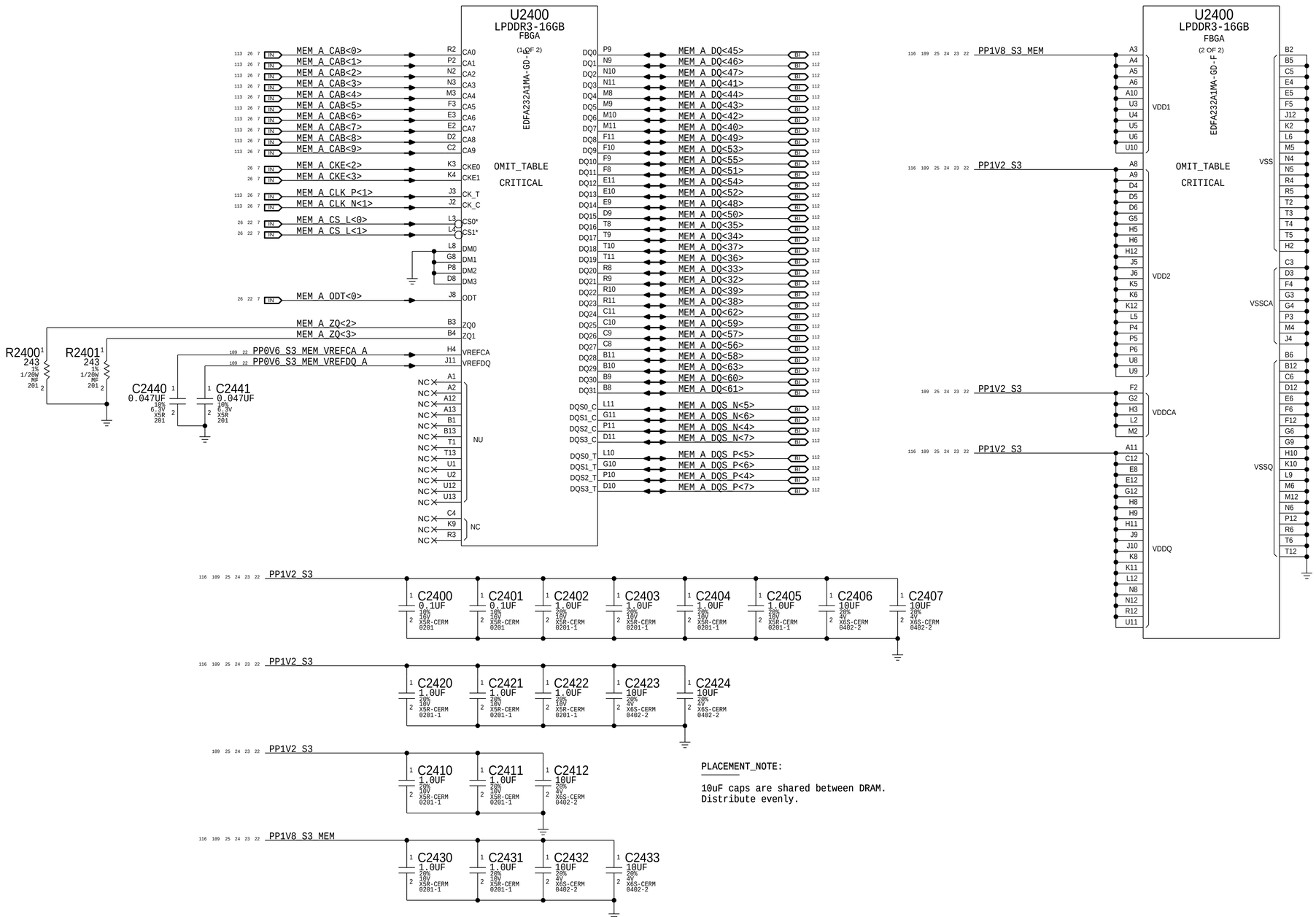

PLACEMENT_NOTE:

10uF caps are shared between DRAM.
Distribute evenly.

BOM_COST_GROUP=DRAM

SYNC_MASTER=J80_MLB SYNC_DATE=11/06/2015

PAGE TITLE
LPDDR3 DRAM Channel A (32-63)

Apple Inc.

DRAWING NUMBER	051-00647
SIZE	D
REVISION	10.0.0
BRANCH	dvt-fab10
PAGE	24 OF 145
SHEET	23 OF 121

NOTICE OF PROPRIETARY PROPERTY:
THE INFORMATION CONTAINED HEREIN IS THE PROPRIETARY PROPERTY OF APPLE INC.
THE POSESSOR AGREES TO THE FOLLOWING:
I TO MAINTAIN THIS DOCUMENT IN CONFIDENCE
II NOT TO REPRODUCE OR COPY IT
III NOT TO REVEAL OR PUBLISH IT IN WHOLE OR PART
IV ALL RIGHTS RESERVED

WWW.AliSaler.Com

LPDDR3 CHANNEL B (0-31)

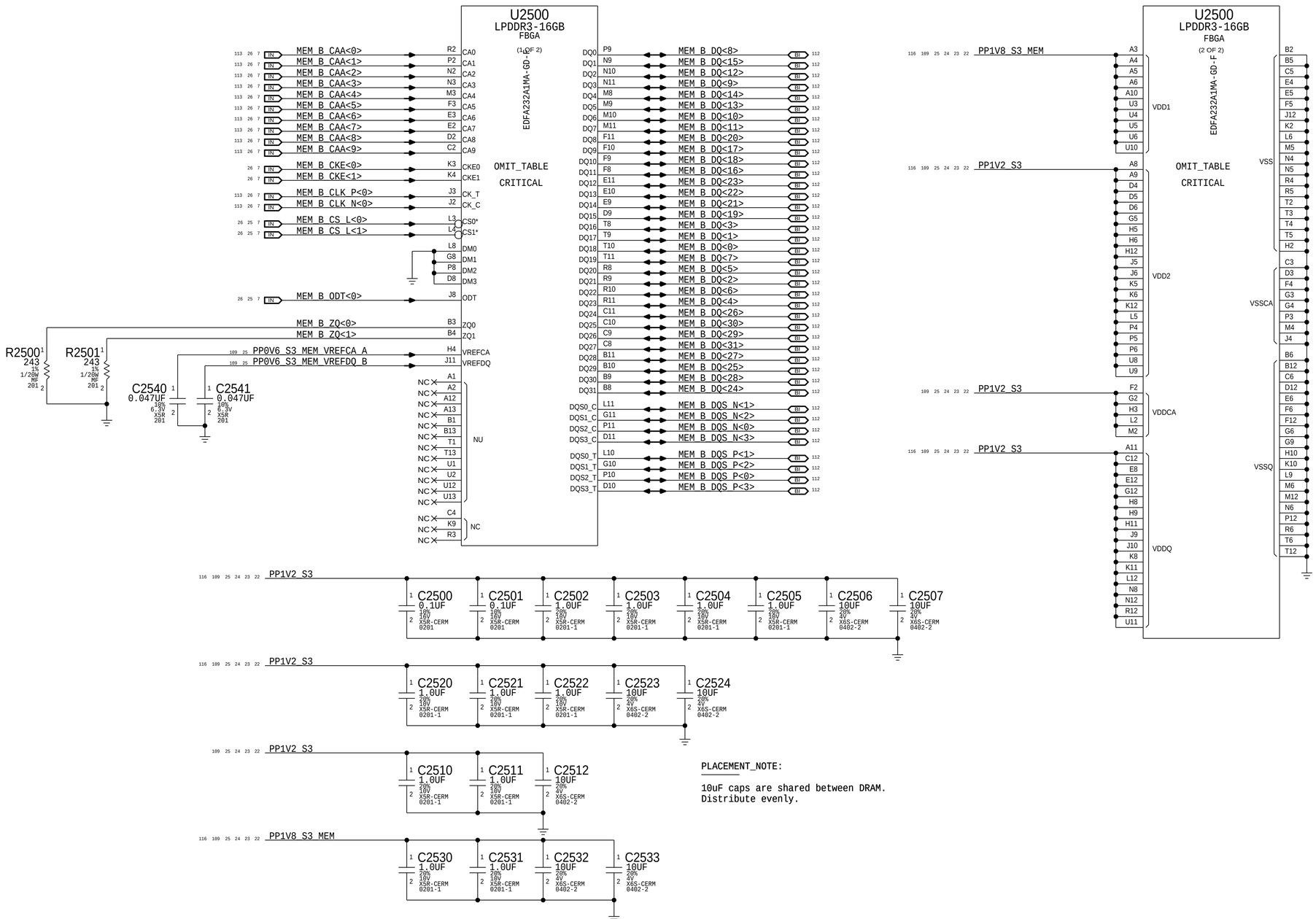

PLACEMENT_NOTE:

10uF caps are shared between DRAM.
Distribute evenly.

BOM_COST_GROUP=DRAM

SYNC_MASTER=J80_MLB SYNC_DATE=11/06/2015

PAGE TITLE
LPDDR3 DRAM Channel B (0-31)

Apple Inc.

DRAWING NUMBER 051-00647 SIZE D
REVISION 10.0.0
BRANCH dvt-fab10
PAGE 25 OF 145
SHEET 24 OF 121

NOTICE OF PROPRIETARY PROPERTY:
THE INFORMATION CONTAINED HEREIN IS THE PROPRIETARY PROPERTY OF APPLE INC.
THE POSESSOR AGREES TO THE FOLLOWING:
I TO MAINTAIN THIS DOCUMENT IN CONFIDENCE
II NOT TO REPRODUCE OR COPY IT
III NOT TO REVEAL OR PUBLISH IT IN WHOLE OR PART
IV ALL RIGHTS RESERVED

WWW.AliSaler.Com

LPDDR3 CHANNEL B (32-63)

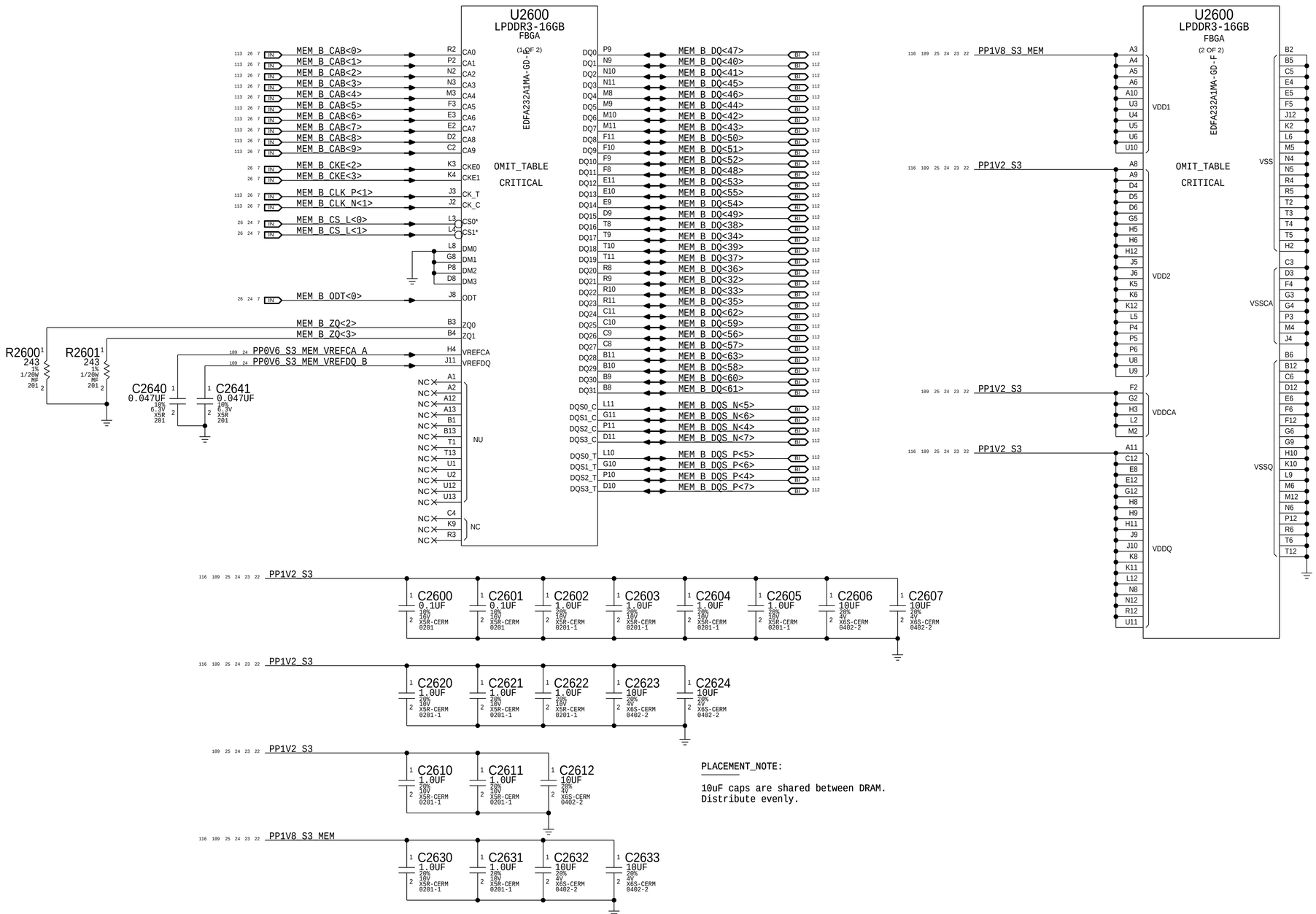

PLACEMENT_NOTE:

10uF caps are shared between DRAM.
Distribute evenly.

BOM_COST_GROUP=DRAM

SYNC_MASTER=J80_MLB SYNC_DATE=11/06/2015

PAGE TITLE
LPDDR3 DRAM Channel B (32-63)

Apple Inc.

DRAWING NUMBER	051-00647
SIZE	D
REVISION	10.0.0
BRANCH	dvt-fab10
PAGE	26 OF 145
SHEET	25 OF 121

NOTICE OF PROPRIETARY PROPERTY:
THE INFORMATION CONTAINED HEREIN IS THE PROPRIETARY PROPERTY OF APPLE INC.
THE POSESSOR AGREES TO THE FOLLOWING:
I TO MAINTAIN THIS DOCUMENT IN CONFIDENCE
II NOT TO REPRODUCE OR COPY IT
III NOT TO REVEAL OR PUBLISH IT IN WHOLE OR PART
IV ALL RIGHTS RESERVED

WWW.AliSaler.Com

Intel recommends 68 Ohm for CMD/ADDR, 80 Ohm for CTRL/CKE, 38 Ohm for CLK

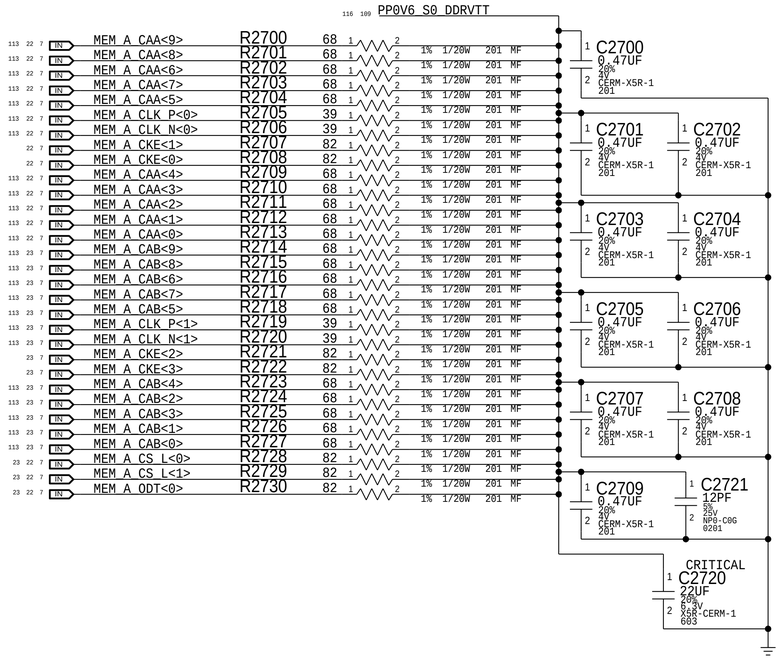

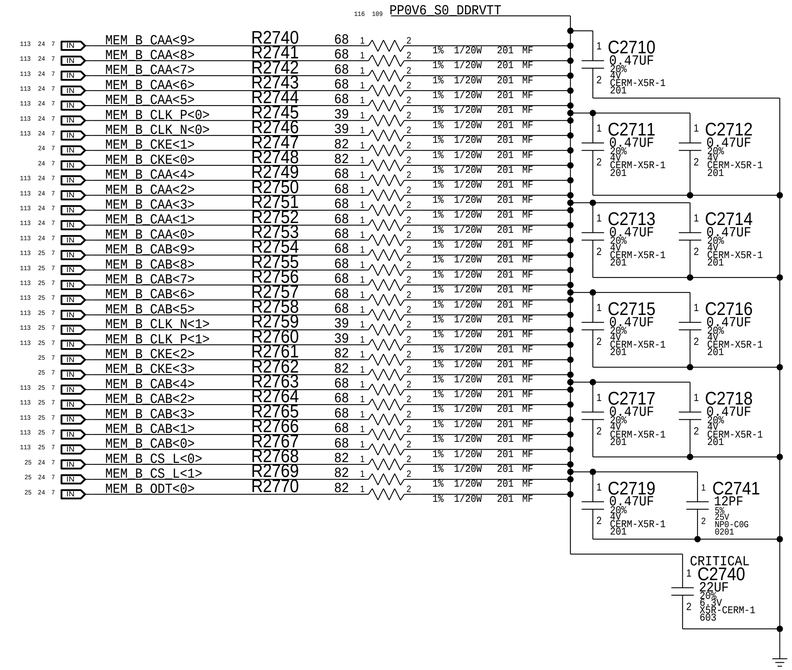

BOM_COST_GROUP=DRAM

SYNC_MASTER=J80_MLB SYNC_DATE=11/06/2015

PAGE TITLE
LPDDR3 DRAM Termination

Apple Inc.

DRAWING NUMBER 051-00647 SIZE D
REVISION 10.0.0
BRANCH dvt-fab10
PAGE 27 OF 145
SHEET 26 OF 121

NOTICE OF PROPRIETARY PROPERTY:
THE INFORMATION CONTAINED HEREIN IS THE PROPRIETARY PROPERTY OF APPLE INC.
THE POSESSOR AGREES TO THE FOLLOWING:
I TO MAINTAIN THIS DOCUMENT IN CONFIDENCE
II NOT TO REPRODUCE OR COPY IT
III NOT TO REVEAL OR PUBLISH IT IN WHOLE OR PART
IV ALL RIGHTS RESERVED

WWW.AliSaler.Com

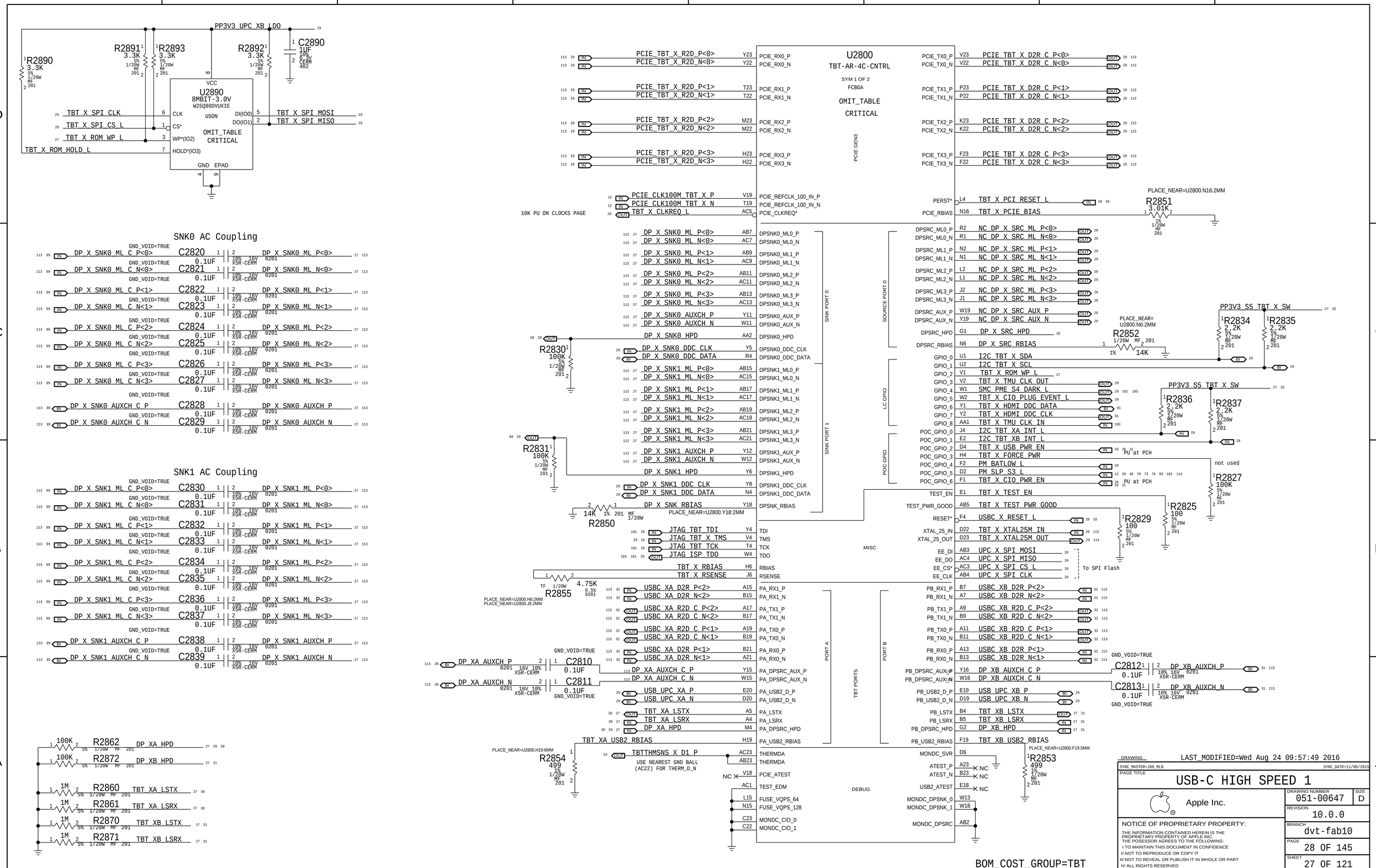

WWW.AliSaler.Com

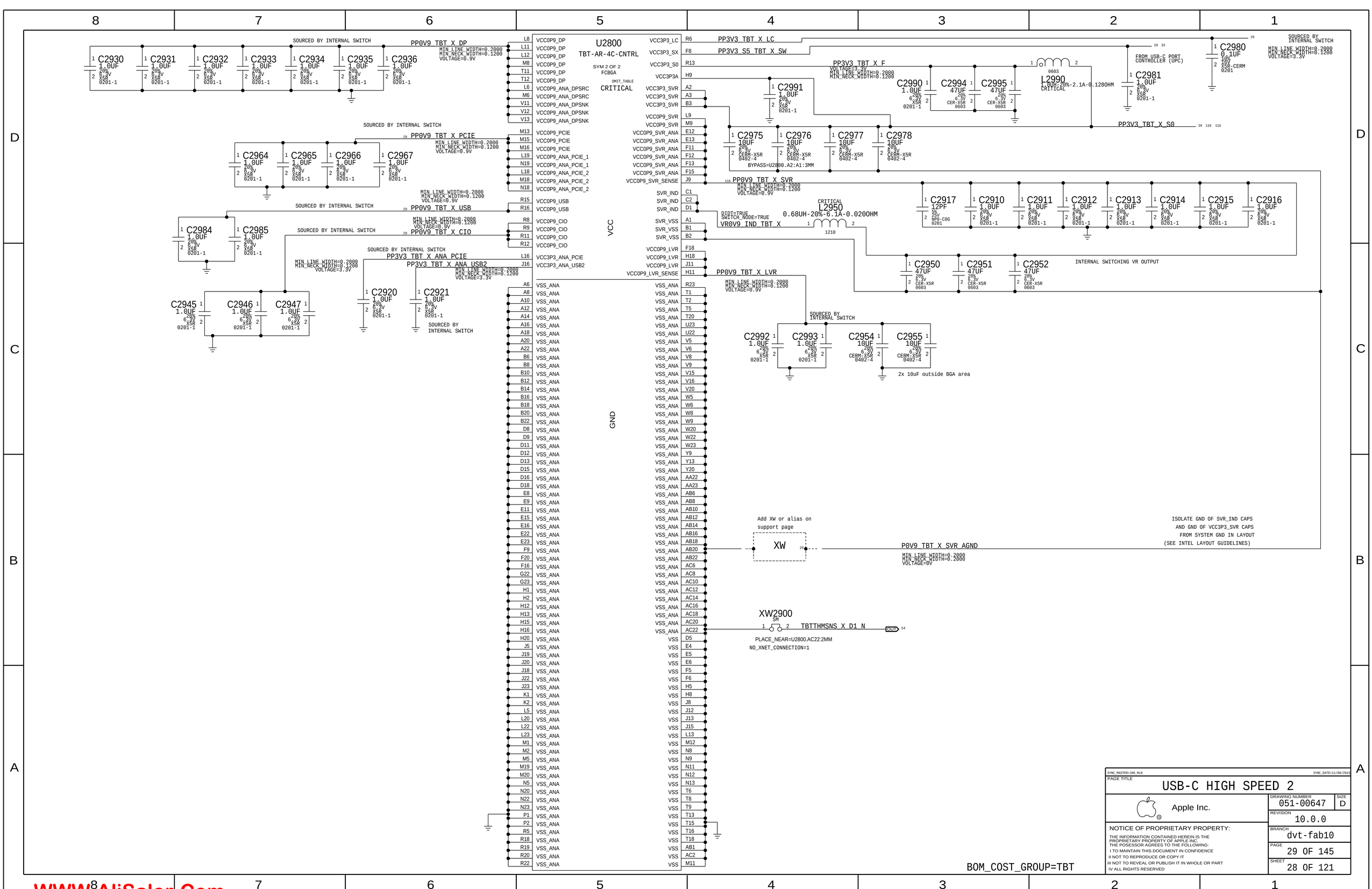

WWW.AliSaler.Com

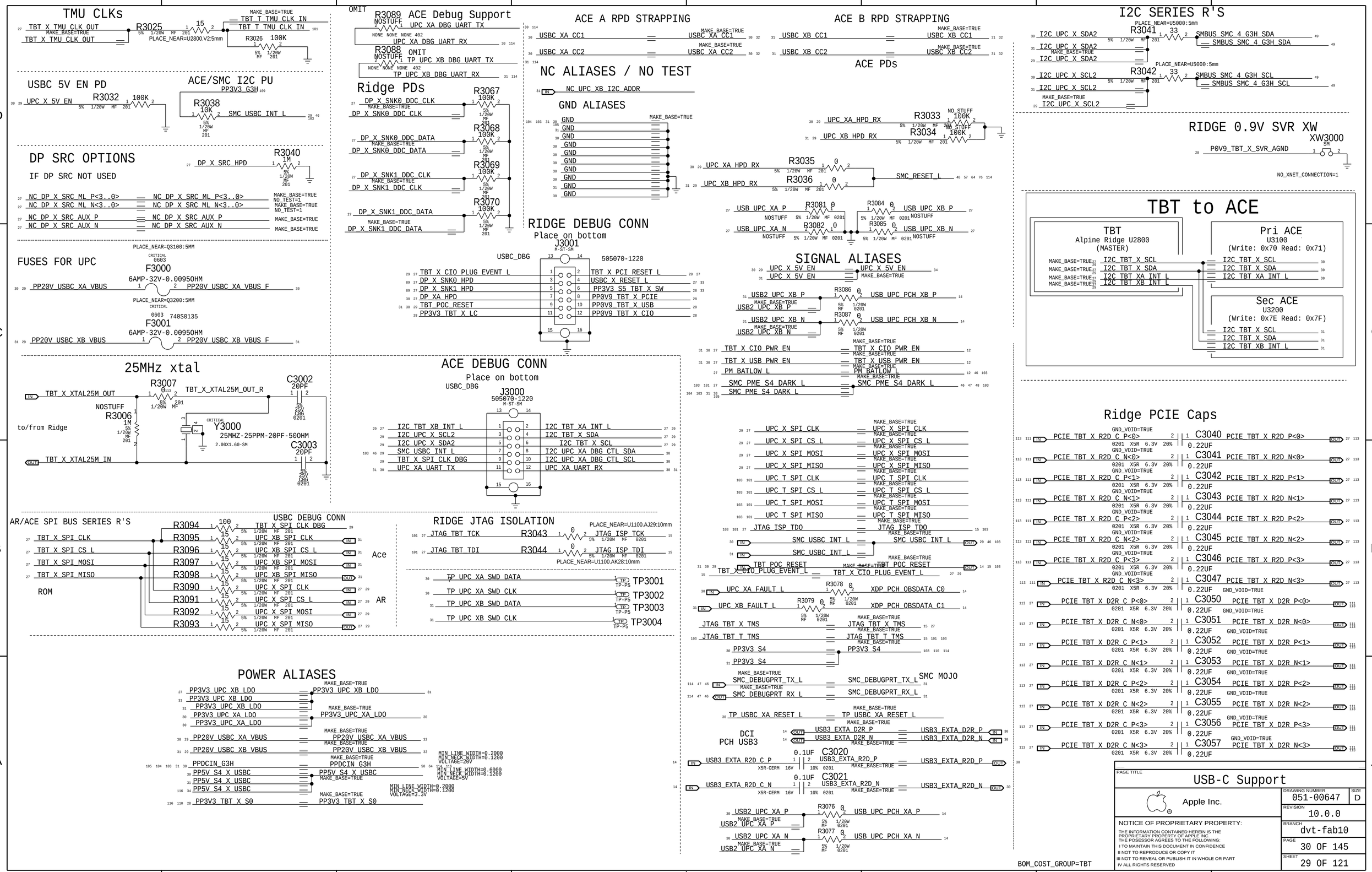

WWW.AliSaler.Com

PRIMARY ACE USB-C PORT CONTROLLER (UPC)

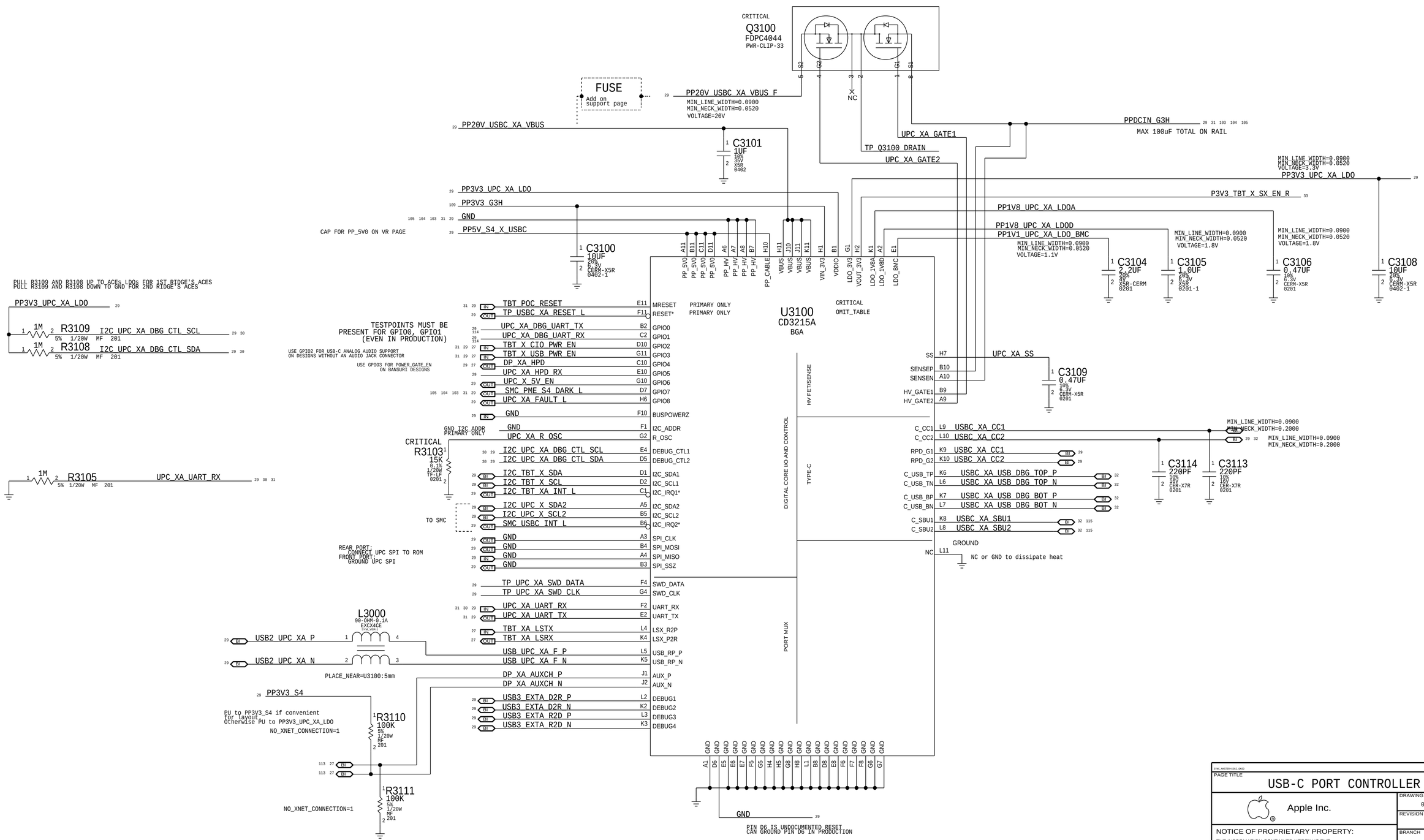

BOM_COST_GROUP=USB-C

PAGE TITLE
USB-C PORT CONTROLLER A

Apple Inc.

DRAWING NUMBER 051-00647
SIZE D
REVISION 10.0.0
BRANCH dvt-fab10
PAGE 31 OF 145
SHEET 30 OF 121

NOTICE OF PROPRIETARY PROPERTY:
THE INFORMATION CONTAINED HEREIN IS THE PROPRIETARY PROPERTY OF APPLE INC.
THE POSESSOR AGREES TO THE FOLLOWING:
I TO MAINTAIN THIS DOCUMENT IN CONFIDENCE
II NOT TO REPRODUCE OR COPY IT
III NOT TO REVEAL OR PUBLISH IT IN WHOLE OR PART
IV ALL RIGHTS RESERVED

WWW.AliSaler.Com

SECONDARY ACE USB-C PORT CONTROLLER (UPC)

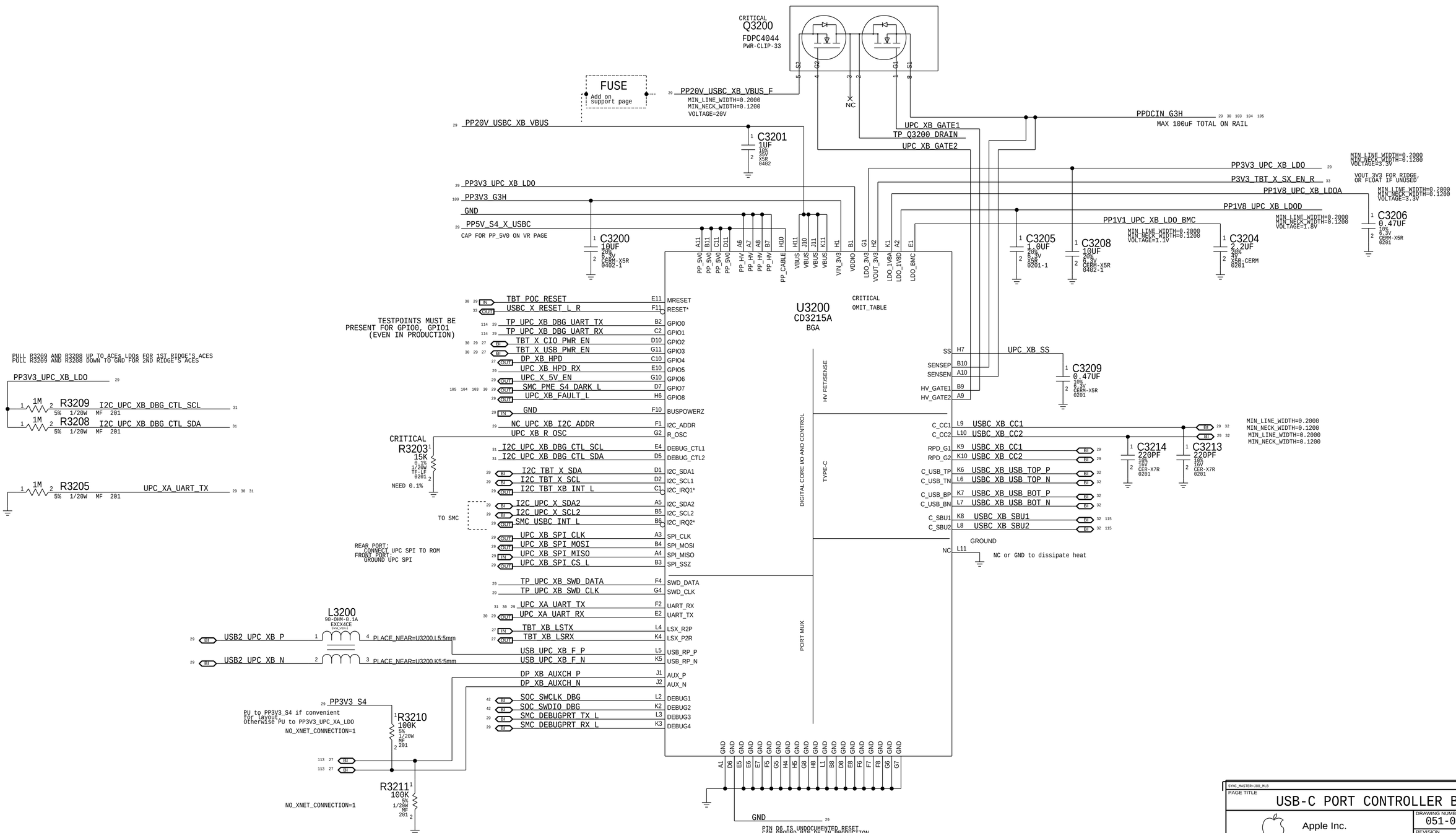

BOM_COST_GROUP=USB-C

SYNC_MASTER=J80_MLB SYNC_DATE=11/06/2015

PAGE TITLE
USB-C PORT CONTROLLER B

Apple Inc.

DRAWING NUMBER 051-00647 SIZE D
REVISION 10.0.0
BRANCH dvt-fab10
PAGE 32 OF 145
SHEET 31 OF 121

NOTICE OF PROPRIETARY PROPERTY:
THE INFORMATION CONTAINED HEREIN IS THE PROPRIETARY PROPERTY OF APPLE INC.
THE POSESSOR AGREES TO THE FOLLOWING:
I TO MAINTAIN THIS DOCUMENT IN CONFIDENCE
II NOT TO REPRODUCE OR COPY IT
III NOT TO REVEAL OR PUBLISH IT IN WHOLE OR PART
IV ALL RIGHTS RESERVED

WWW.AliSaler.Com

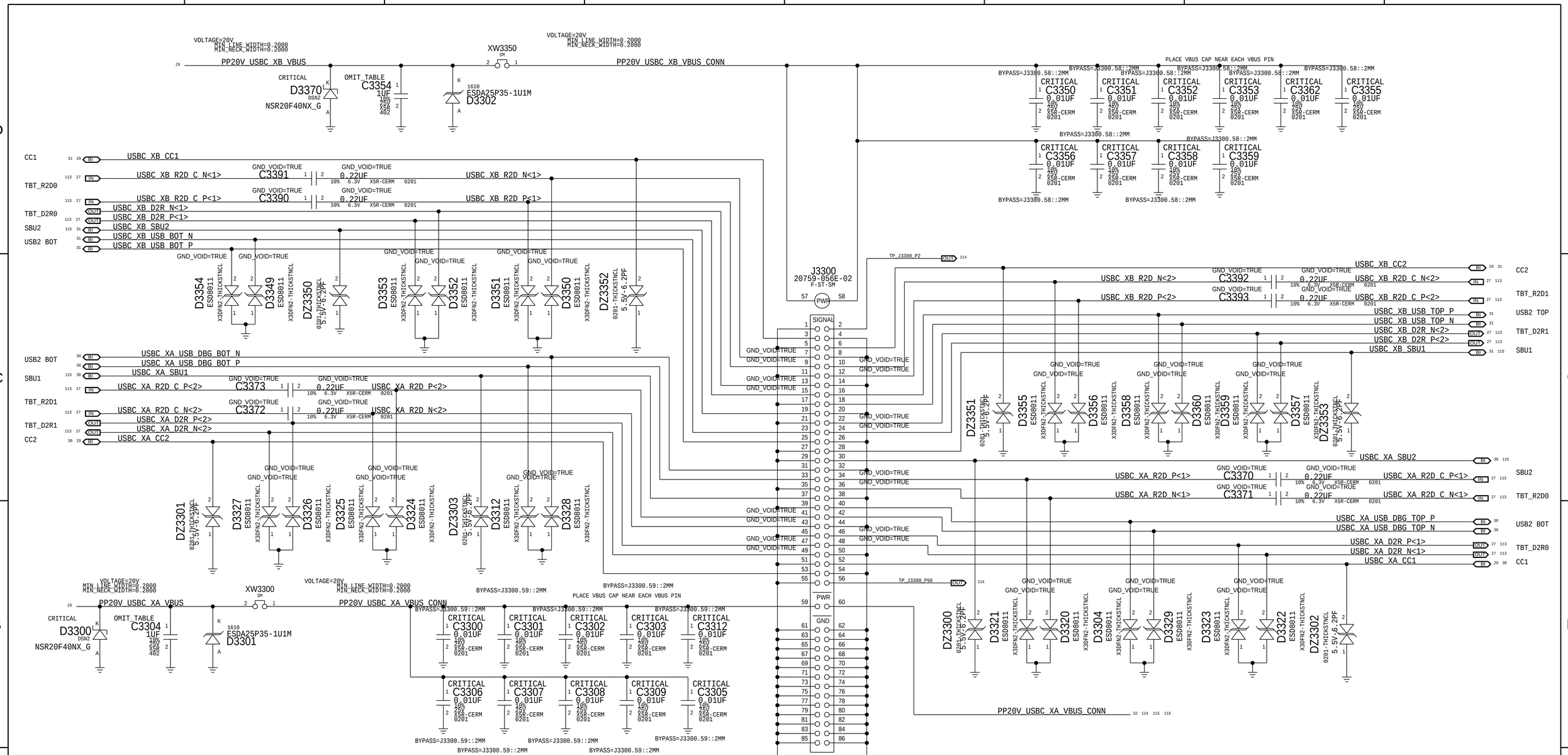

PART NUMBER	QTY	DESCRIPTION	REFERENCE DES	CRITICAL	BOM OPTION
138S0683	2	CAP,CER,X5R,1UF,10%,25V,0402	C3304, C3354	CRITICAL	NOSTUFF

BOM_COST_GROUP=USB-C

LAST CHANGE: Wed Apr 1 22:57:37 2015

PAGE TITLE
USB-C CONNECTOR A

Apple Inc.

DRAWING NUMBER 051-00647 SIZE D
REVISION 10.0.0
BRANCH dvt-fab10
PAGE 33 OF 145
SHEET 32 OF 121

NOTICE OF PROPRIETARY PROPERTY:
THE INFORMATION CONTAINED HEREIN IS THE PROPRIETARY PROPERTY OF APPLE INC.
THE POSESSOR AGREES TO THE FOLLOWING:
I TO MAINTAIN THIS DOCUMENT IN CONFIDENCE
II NOT TO REPRODUCE OR COPY IT
III NOT TO REVEAL OR PUBLISH IT IN WHOLE OR PART
IV ALL RIGHTS RESERVED

WWW.AliSaler.Com

TBT X "POC" Power-up Reset

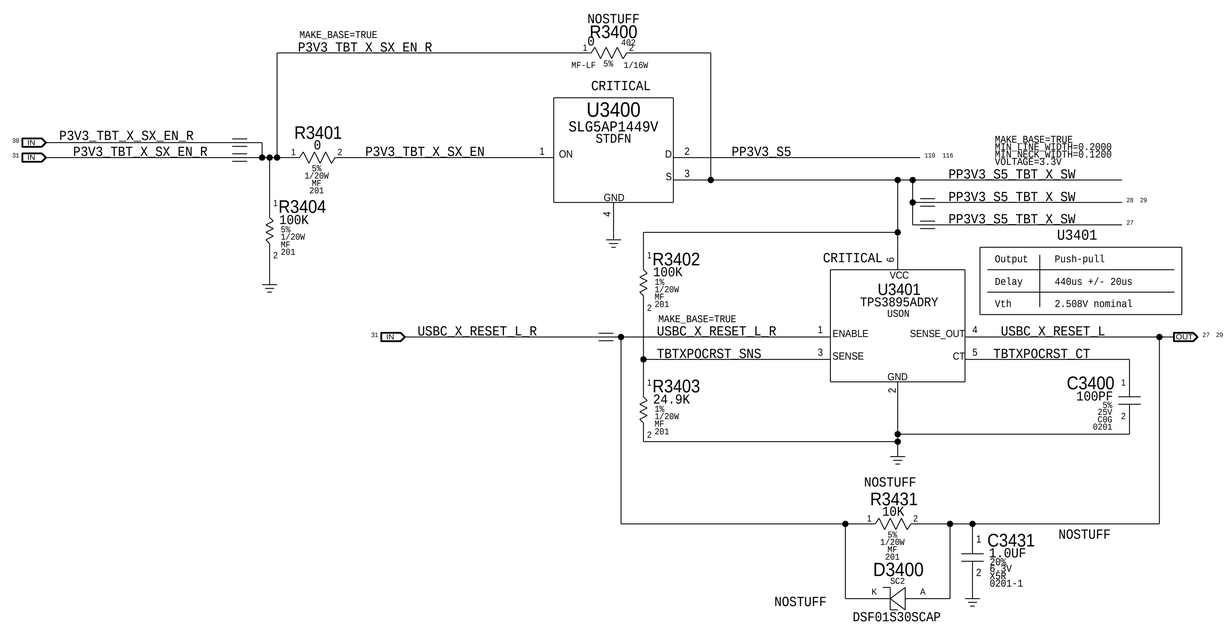

BOM_COST_GROUP=USB-C

DESIGN: X502/DEV_MLB_U
LAST CHANGE: Wed Feb 18 17:12:24 2015

PAGE TITLE
USB-C CONNECTOR B

Apple Inc.

DRAWING NUMBER 051-00647
SIZE D
REVISION 10.0.0
BRANCH dvt-fab10
PAGE 34 OF 145
SHEET 33 OF 121

NOTICE OF PROPRIETARY PROPERTY:
THE INFORMATION CONTAINED HEREIN IS THE PROPRIETARY PROPERTY OF APPLE INC.
THE POSESSOR AGREES TO THE FOLLOWING:
I TO MAINTAIN THIS DOCUMENT IN CONFIDENCE
II NOT TO REPRODUCE OR COPY IT
III NOT TO REVEAL OR PUBLISH IT IN WHOLE OR PART
IV ALL RIGHTS RESERVED

WWW.AliSaler.Com

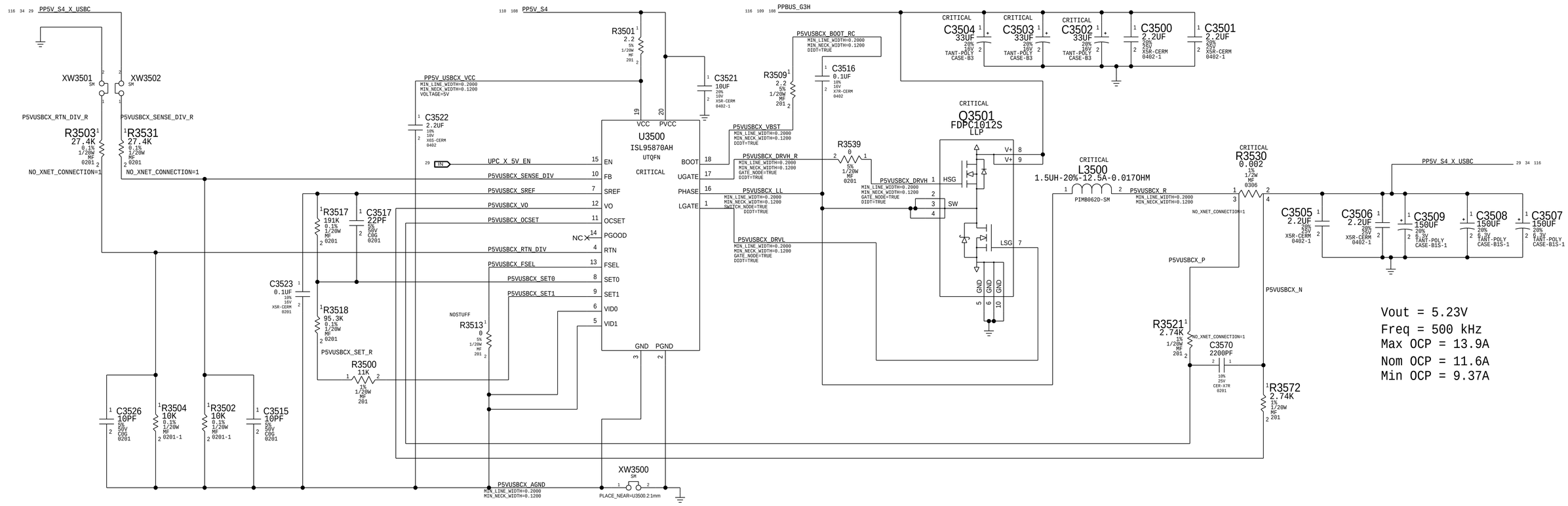

BOM_COST_GROUP=USB-C

SYNC_MASTER=J80_ZIFENGSHEN_MLB_BAFFIN SYNC_DATE=12/04/2015

PAGE TITLE

TBT 5V REGULATOR

Apple Inc.

DRAWING NUMBER	051-00647
SIZE	D
REVISION	10.0.0
BRANCH	dvt-fab10
PAGE	35 OF 145
SHEET	34 OF 121

NOTICE OF PROPRIETARY PROPERTY:
THE INFORMATION CONTAINED HEREIN IS THE PROPRIETARY PROPERTY OF APPLE INC.
THE POSESSOR AGREES TO THE FOLLOWING:
I TO MAINTAIN THIS DOCUMENT IN CONFIDENCE
II NOT TO REPRODUCE OR COPY IT
III NOT TO REVEAL OR PUBLISH IT IN WHOLE OR PART
IV ALL RIGHTS RESERVED

WWW.AliSaler.Com

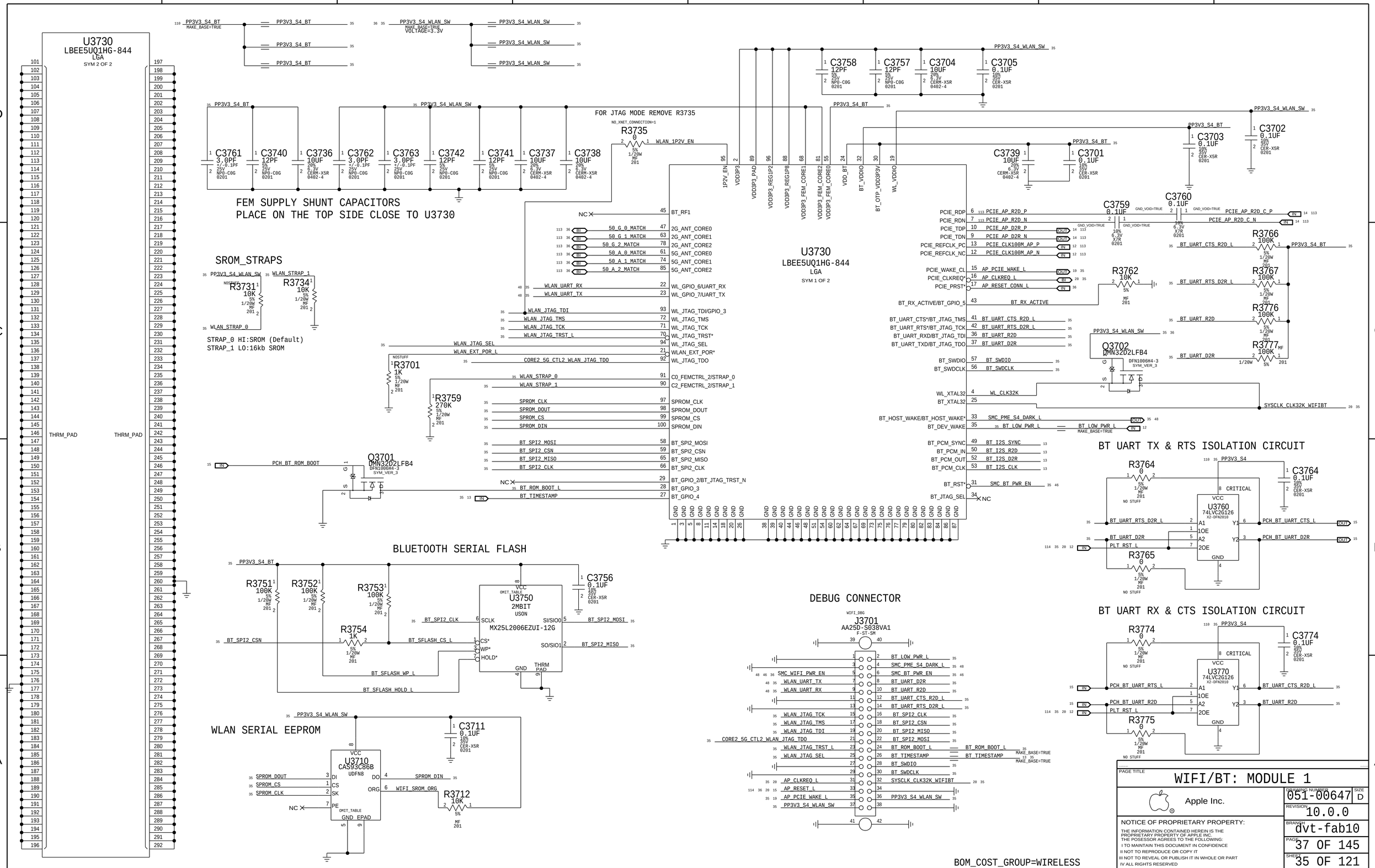

WWW.AliSaler.Com

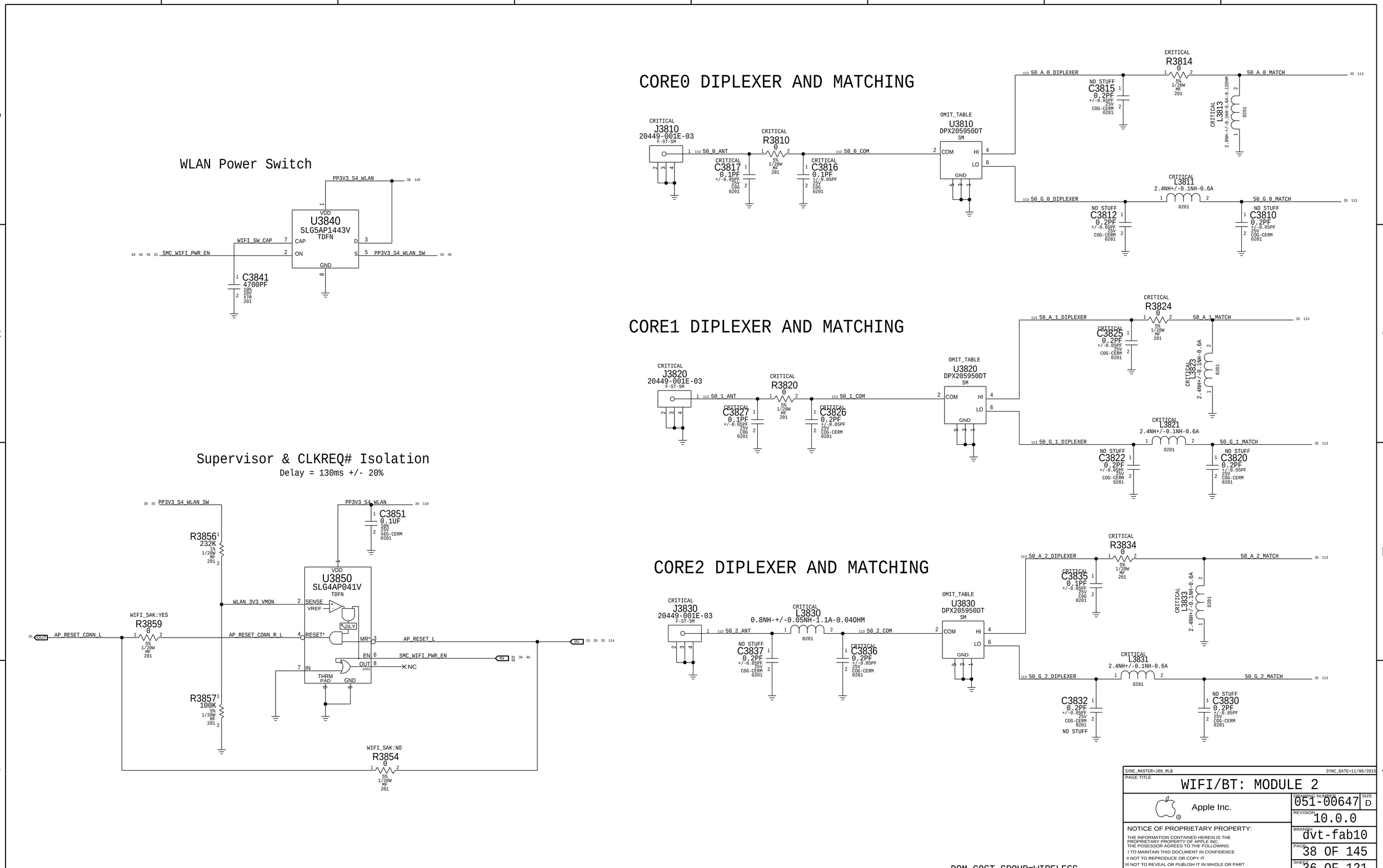

WWW.AliSaler.Com

PART NUMBER	QTY	DESCRIPTION	REFERENCE DES	CRITICAL	BOM OPTION
343S00136	1	IC,M8+512MB 20NM DDR,A12,S,SCK,BGA700	U3900	CRITICAL	SOC:HYNIX

T208

PART NUMBER	QTY	DESCRIPTION	REFERENCE DES	CRITICAL	BOM OPTION
338S00147	1	IC,RTM2,DEV,PN549A1,P61D0	U3905	CRITICAL	SE:DEV
338S00097	1	IC,RTM2,MP,PN549A1,P61D0	U3905	CRITICAL	SE:PROD

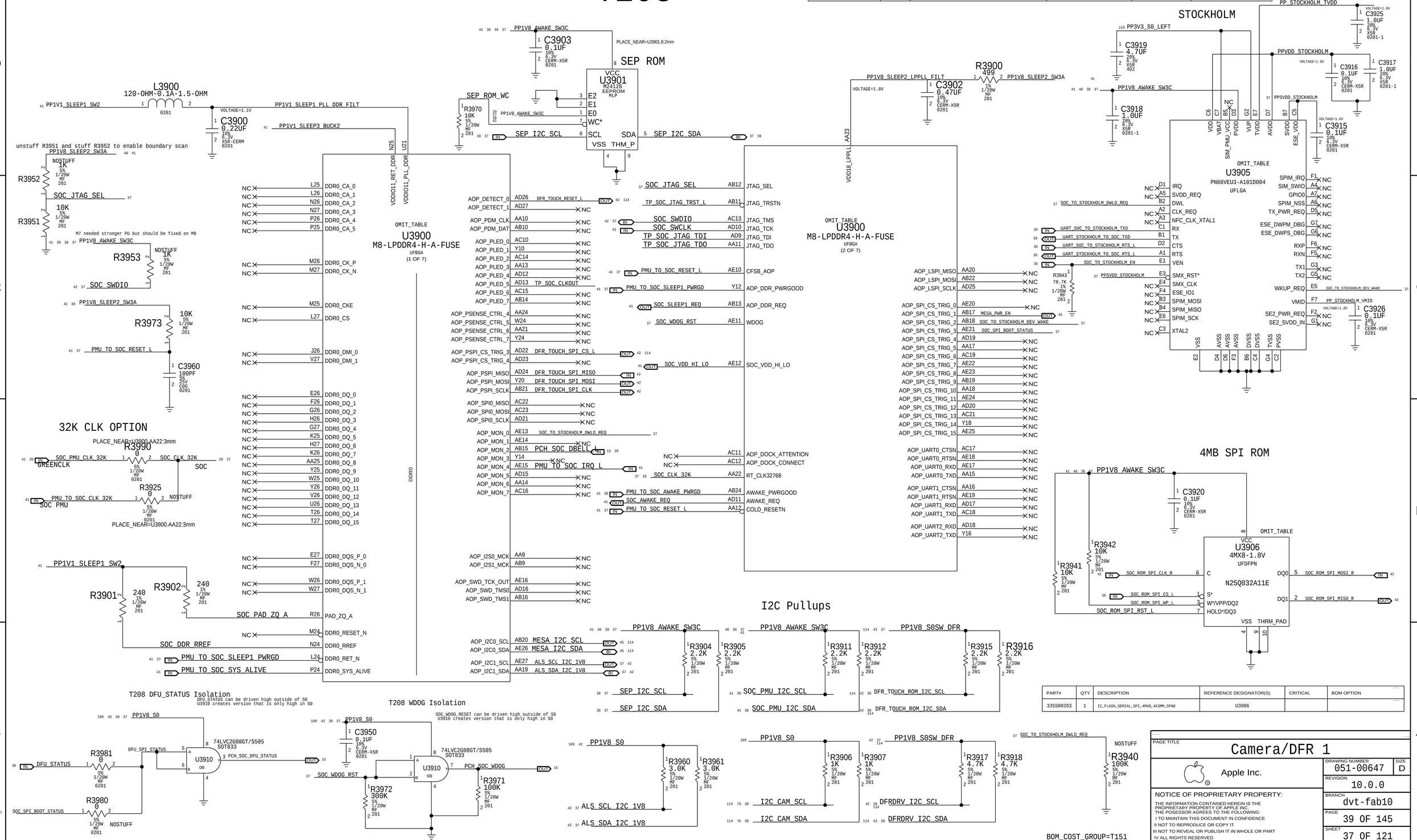

PART#	QTY	DESCRIPTION	REFERENCE DESIGNATOR(S)	CRITICAL	BOM OPTION
335S00203	1	IC,FLASH,SERIAL,SPI,4MX8,4X3MM,DFN8	U3906		

PAGE TITLE
Camera/DFR 1

Apple Inc.

DRAWING NUMBER 051-00647 SIZE D
REVISION 10.0.0
BRANCH dvt-fab10
PAGE 39 OF 145
SHEET 37 OF 121

NOTICE OF PROPRIETARY PROPERTY:
THE INFORMATION CONTAINED HEREIN IS THE PROPRIETARY PROPERTY OF APPLE INC.
THE POSESSOR AGREES TO THE FOLLOWING:
I TO MAINTAIN THIS DOCUMENT IN CONFIDENCE
II NOT TO REPRODUCE OR COPY IT
III NOT TO REVEAL OR PUBLISH IT IN WHOLE OR PART
IV ALL RIGHTS RESERVED

WWW.AliSaler.Com

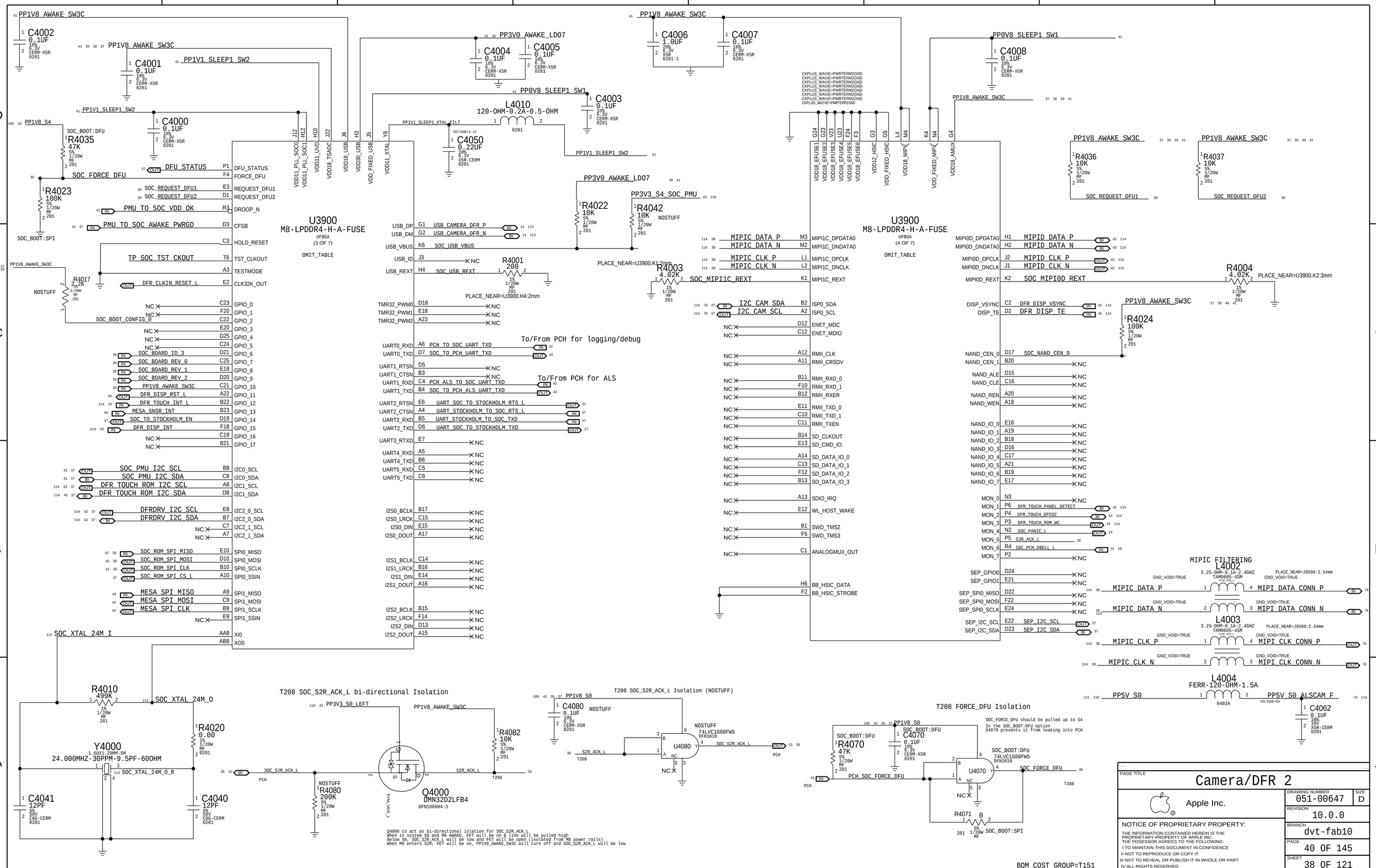

WWW.AliSaler.Com

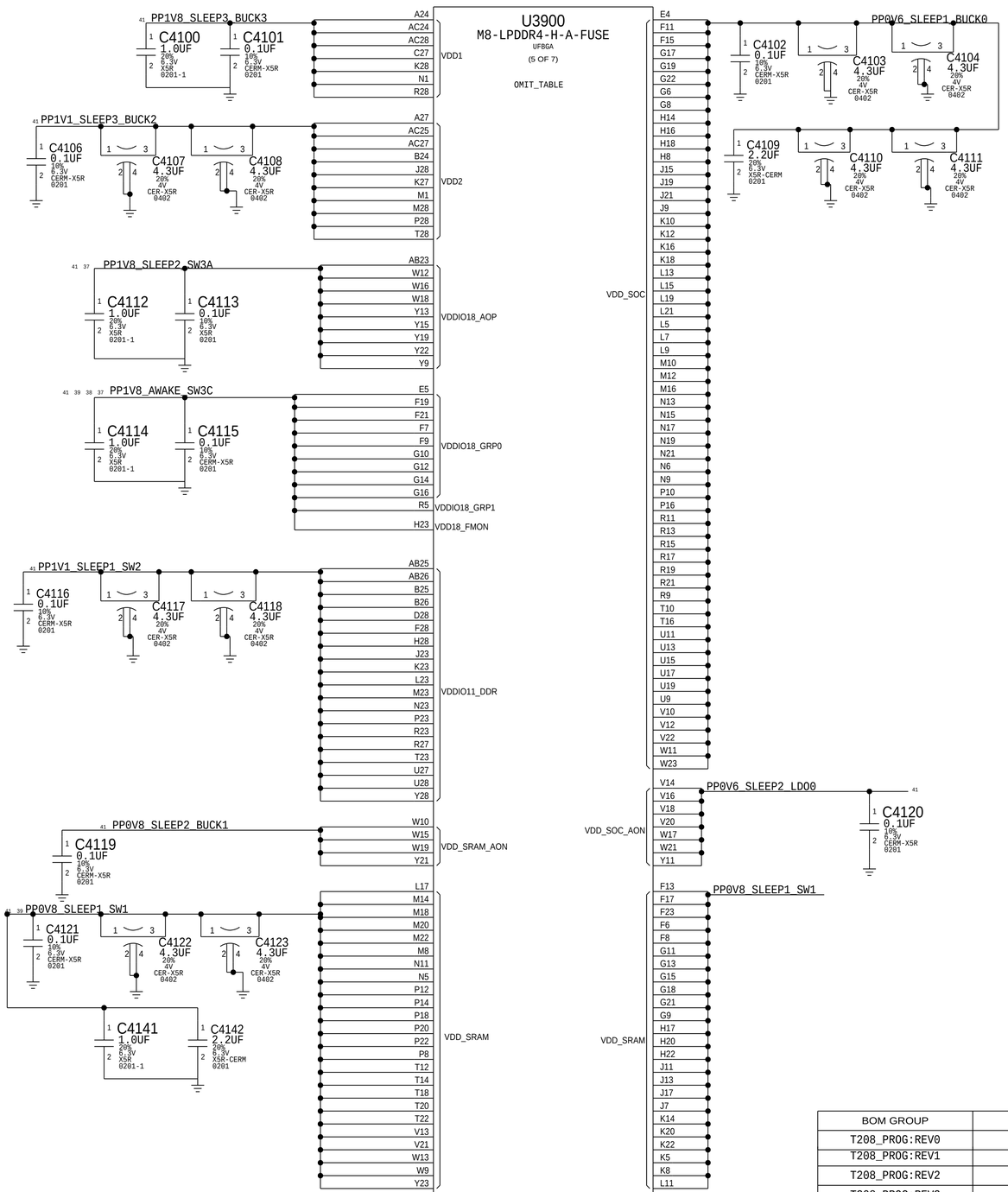

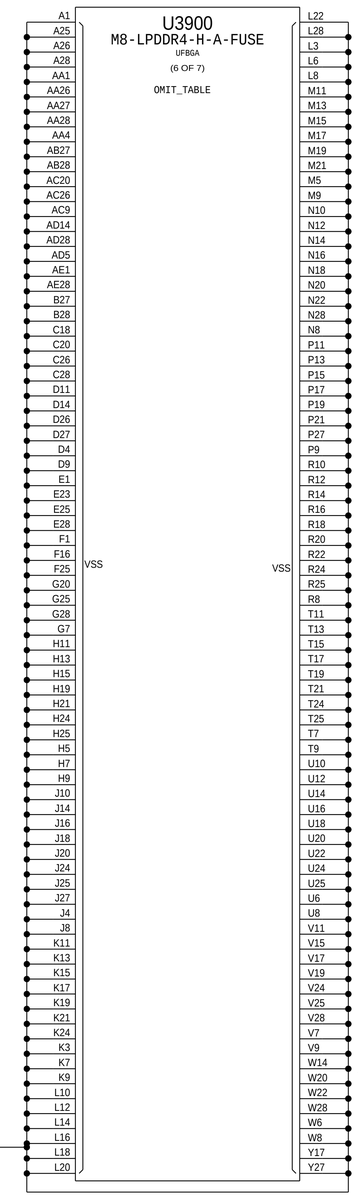

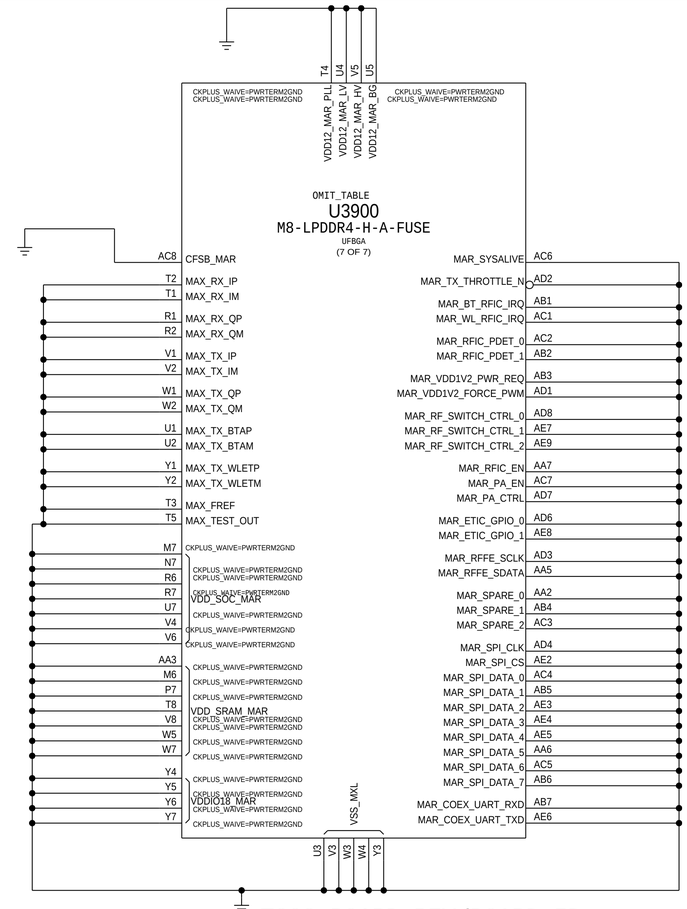

T208 BOARD REV/BOARD ID

S/W READ FLOW

1. SET GPIO AS INPUT
2. DISABLE PU AND ENABLE PD
3. READ
4. DISABLE PD AND ENABLE PU

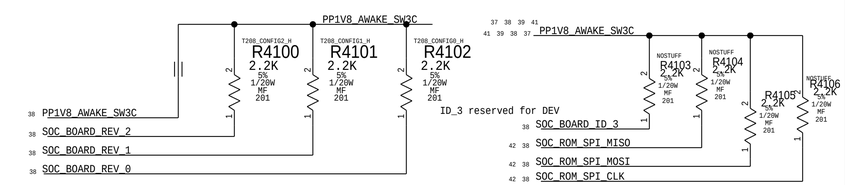

BOARD REV[3:0]	MODE
1111	T208_Rev0 (X362 P0)
1110	T208_Rev1 (X363 P0)
1101	T208_Rev2 (X362 P1)
1100	T208_Rev3 (X362 P2)
1011	T208_Rev4 (X363 P2/X362 localEVT)
1010	T208_Rev5 (X363 EVT/X362 EVT1)

BOARD ID[3:0]	MODE
1XXX	T202 DEV
0010	T208

BOM GROUP	BOM OPTIONS
T208_PROG:REV0	T208_CONFIG2_H,T208_CONFIG1_H,T208_CONFIG0_H
T208_PROG:REV1	T208_CONFIG2_H,T208_CONFIG1_H
T208_PROG:REV2	T208_CONFIG2_H,T208_CONFIG0_H
T208_PROG:REV3	T208_CONFIG2_H
T208_PROG:REV4	T208_CONFIG1_H, T208_CONFIG0_H
T208_PROG:REV5	T208_CONFIG1_H

BOM_COST_GROUP=T151

PAGE TITLE: Camera/DFR 3

Apple Inc.

DRAWING NUMBER: 051-00647 SIZE: D

REVISION: 10.0.0

BRANCH: dvt-fab10

PAGE: 41 OF 145

SHEET: 39 OF 121

NOTICE OF PROPRIETARY PROPERTY:
THE INFORMATION CONTAINED HEREIN IS THE PROPRIETARY PROPERTY OF APPLE INC.
THE POSESSOR AGREES TO THE FOLLOWING:
I TO MAINTAIN THIS DOCUMENT IN CONFIDENCE
II NOT TO REPRODUCE OR COPY IT
III NOT TO REVEAL OR PUBLISH IT IN WHOLE OR PART
IV ALL RIGHTS RESERVED

WWW.AliSaler.Com

Berkelium

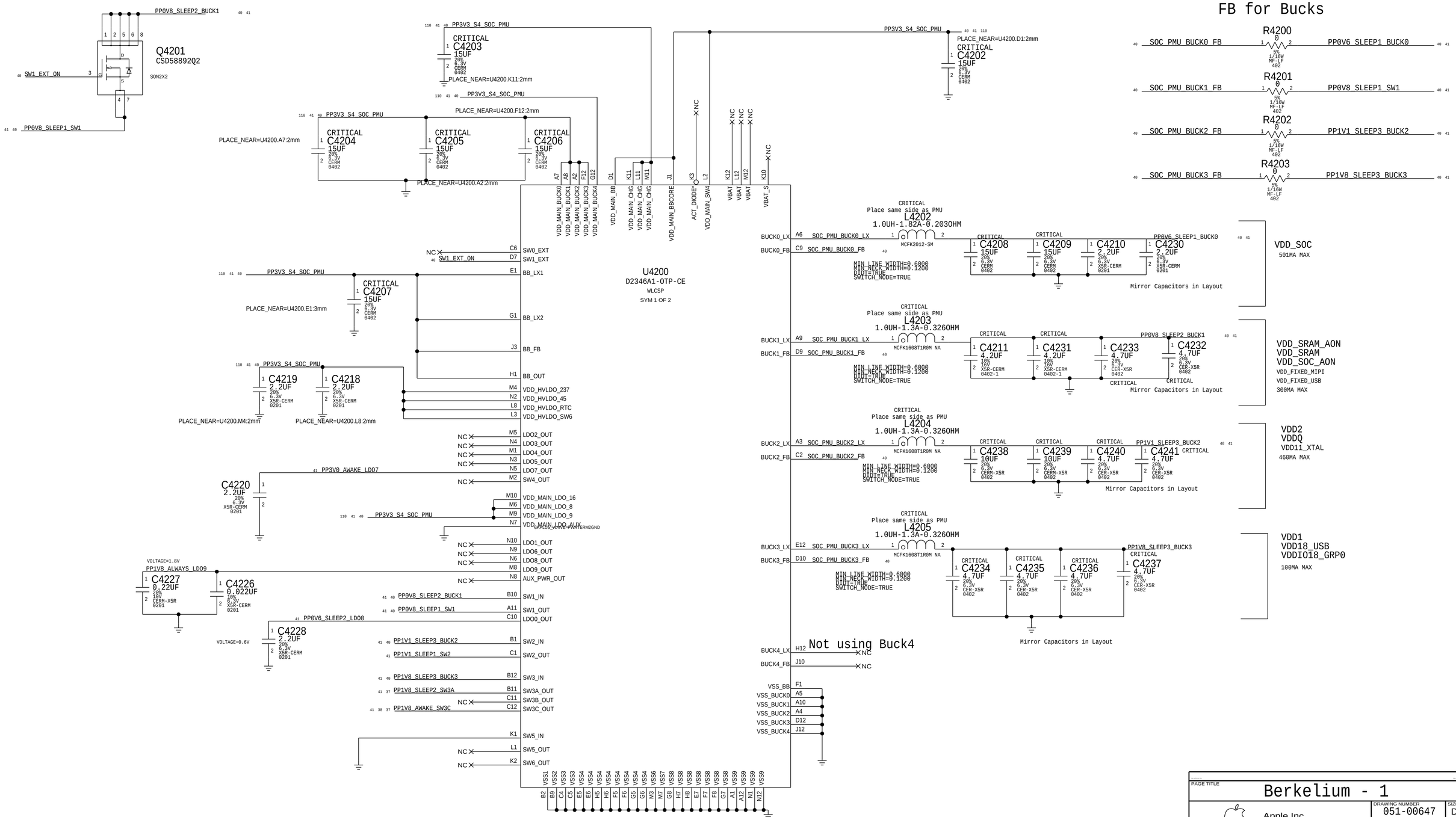

PAGE TITLE: Berkelium - 1

Apple Inc.

DRAWING NUMBER: 051-00647 SIZE: D

REVISION: 10.0.0

BRANCH: dvt-fab10

PAGE: 42 OF 145

SHEET: 40 OF 121

NOTICE OF PROPRIETARY PROPERTY:
THE INFORMATION CONTAINED HEREIN IS THE PROPRIETARY PROPERTY OF APPLE INC.
THE POSESSOR AGREES TO THE FOLLOWING:
I TO MAINTAIN THIS DOCUMENT IN CONFIDENCE
II NOT TO REPRODUCE OR COPY IT
III NOT TO REVEAL OR PUBLISH IT IN WHOLE OR PART
IV ALL RIGHTS RESERVED

WWW.AliSaler.Com

Berkelium - 2

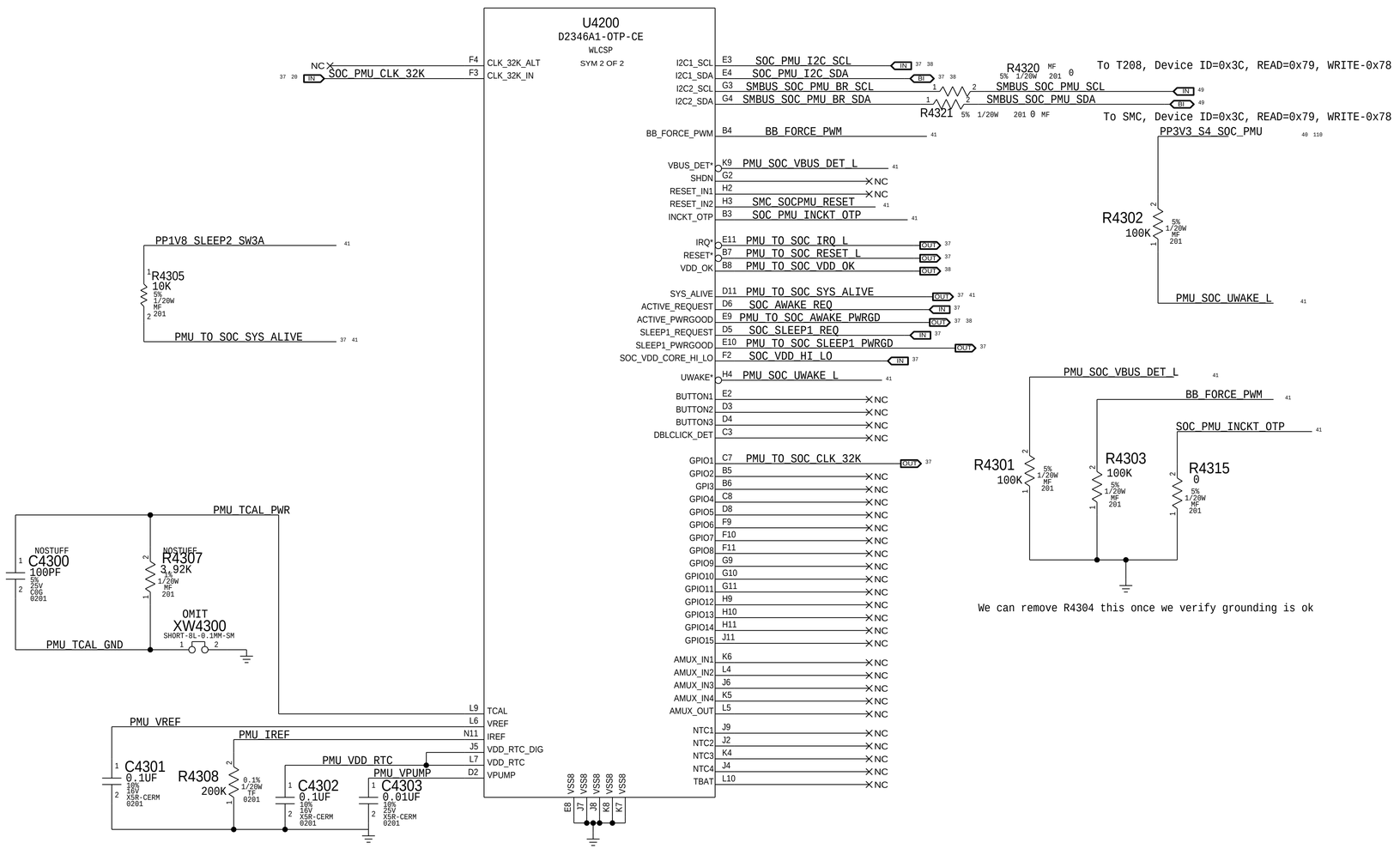

Signal Aliases

SMC_SOCPMU_RESET — SMC_SOCPMU_RESET (MAKE_BASE=TRUE)

T208 POWER ALIASES

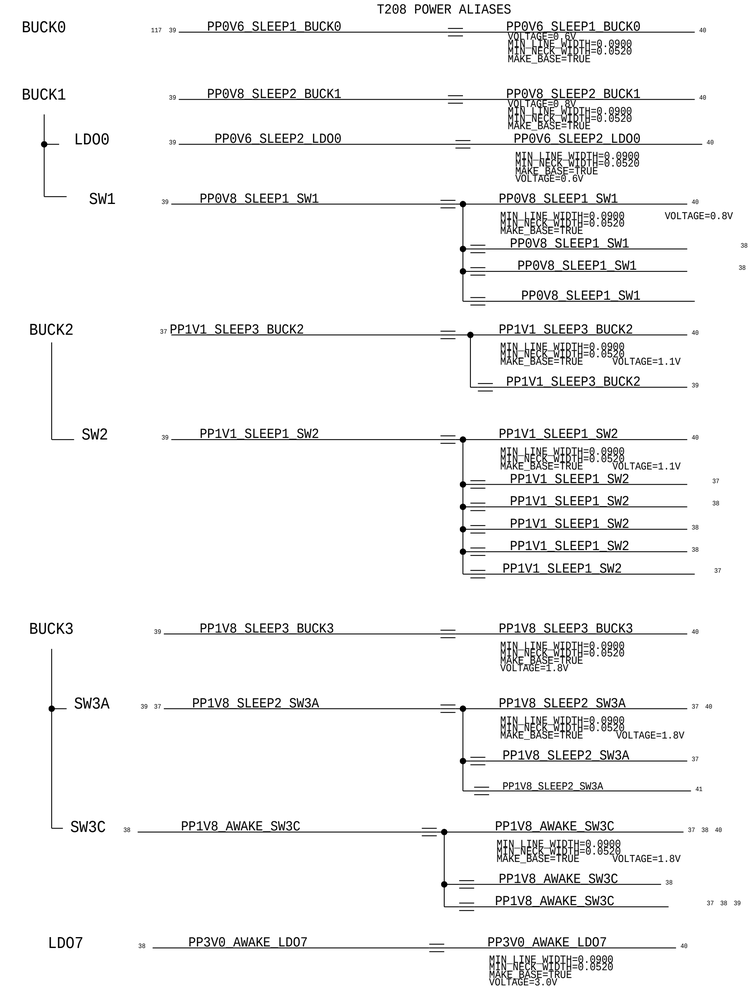

BOM_COST_GROUP=T151

PAGE TITLE	Berkelium - 2
	Apple Inc.
DRAWING NUMBER	051-00647
SIZE	D
REVISION	10.0.0
BRANCH	dvt-fab10
PAGE	43 OF 145
SHEET	41 OF 121

NOTICE OF PROPRIETARY PROPERTY:
THE INFORMATION CONTAINED HEREIN IS THE PROPRIETARY PROPERTY OF APPLE INC.
THE POSESSOR AGREES TO THE FOLLOWING:
I TO MAINTAIN THIS DOCUMENT IN CONFIDENCE
II NOT TO REPRODUCE OR COPY IT
III NOT TO REVEAL OR PUBLISH IT IN WHOLE OR PART
IV ALL RIGHTS RESERVED

WWW.AliSaler.Com

T208 Support

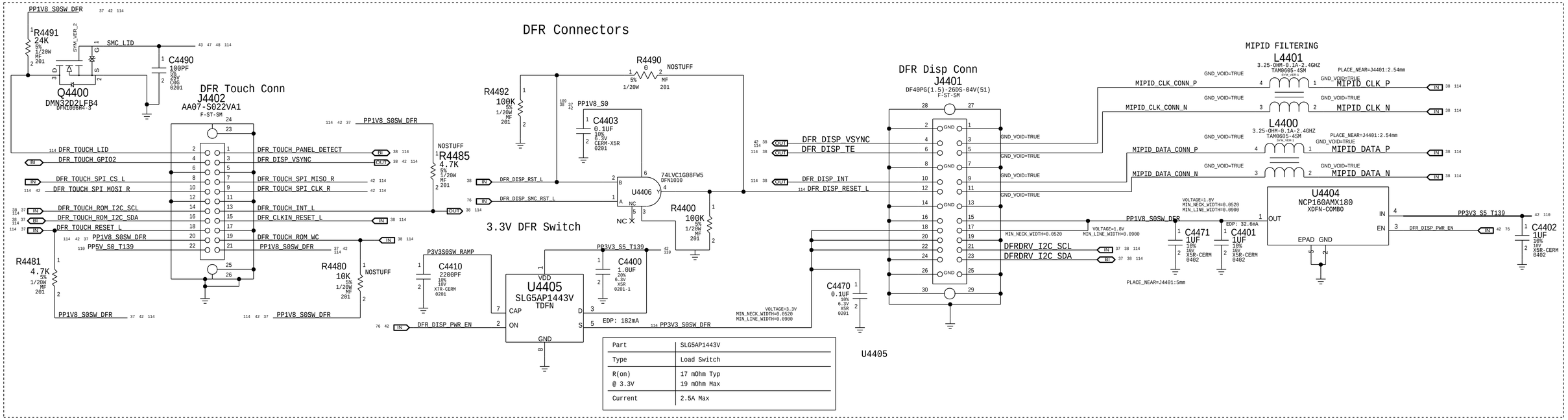

Part	SLG5AP1443V
Type	Load Switch
R(on) @ 3.3V	17 mOhm Typ 19 mOhm Max
Current	2.5A Max

SWD DEBUG MUX

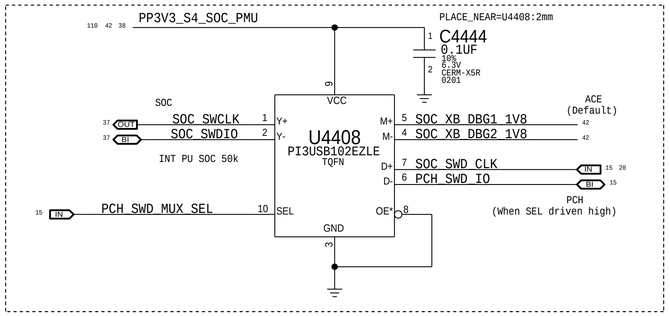

T208 I2C Mapping

Bus	Device	7-bit Address	8-bit Address Read	8-bit Address Write
AP0	PMU	0011110 (0x3C)	0x79	0x78
AP1	Touch EEPROM	1010000 (0x50)	0xA1	0xA0
AP2_0	Tesla	1010100 (0x4C)	0x99	0x98
AOP0	Mesa EEPROM	101000x (0x50/0x51)	0xA1/A3	0xA0/A2
AOP1	ALS	0111001 (0x39)	0x73	0x72
SEP	M34128 EEPROM	1010001 (0x51)	0xA3	0xA2

SPI TERM

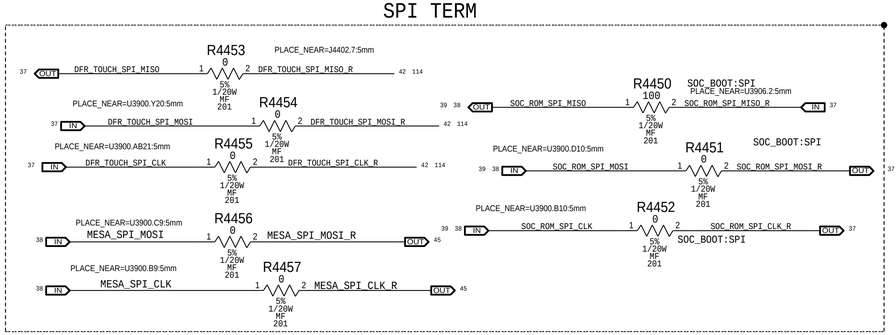

T208 LEVEL SHIFTING

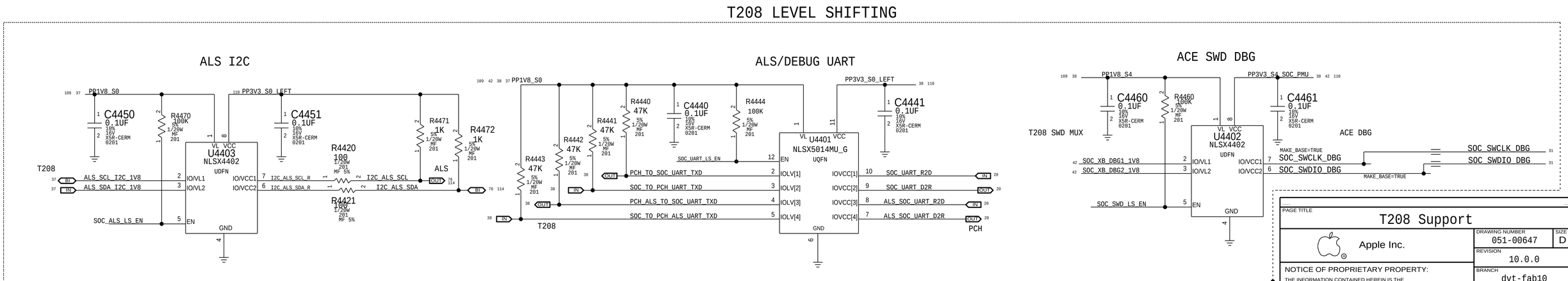

BOM_COST_GROUP=T151

PAGE TITLE: T208 Support

Apple Inc.

DRAWING NUMBER: 051-00647 | SIZE: D

REVISION: 10.0.0

BRANCH: dvt-fab10

PAGE: 44 OF 145

SHEET: 42 OF 121

NOTICE OF PROPRIETARY PROPERTY:
THE INFORMATION CONTAINED HEREIN IS THE PROPRIETARY PROPERTY OF APPLE INC.
THE POSESSOR AGREES TO THE FOLLOWING:
I TO MAINTAIN THIS DOCUMENT IN CONFIDENCE
II NOT TO REPRODUCE OR COPY IT
III NOT TO REVEAL OR PUBLISH IT IN WHOLE OR PART
IV ALL RIGHTS RESERVED

WWW.AliSaler.Com

KBD CONNECTOR

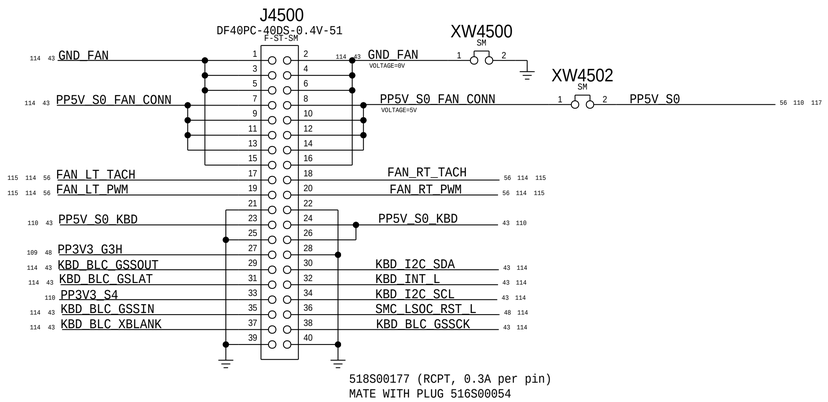

TPAD CONNECTOR

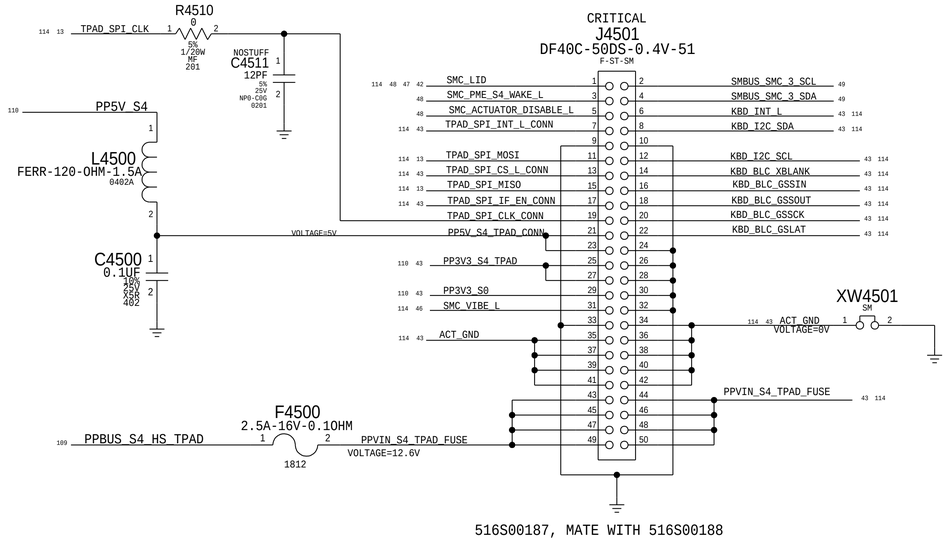

TRACKPAD ISOLATION GATES/FET

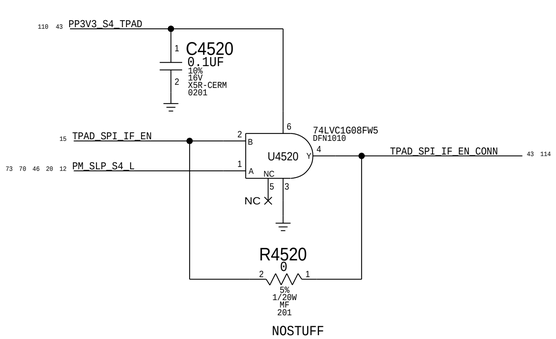

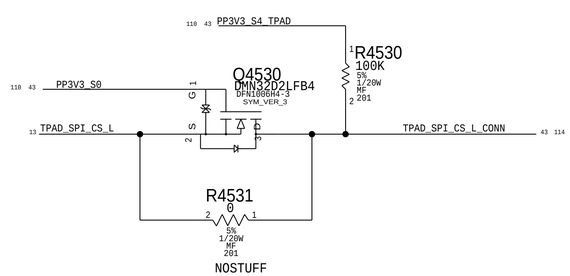

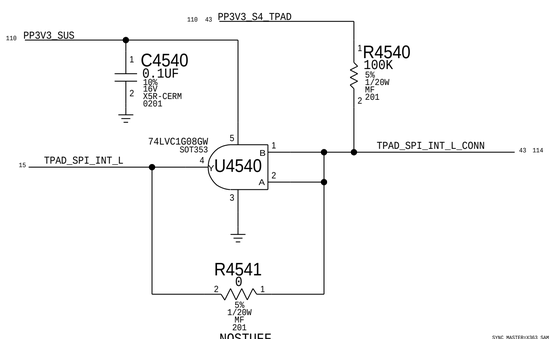

BOM_COST_GROUP=KEYBOARD

PAGE TITLE	Connectors&ESD
	Apple Inc.
DRAWING NUMBER	051-00647
SIZE	D
REVISION	10.0.0
BRANCH	dvt-fab10
PAGE	45 OF 145
SHEET	43 OF 121

NOTICE OF PROPRIETARY PROPERTY:
THE INFORMATION CONTAINED HEREIN IS THE PROPRIETARY PROPERTY OF APPLE INC.
THE POSESSOR AGREES TO THE FOLLOWING:
I TO MAINTAIN THIS DOCUMENT IN CONFIDENCE
II NOT TO REPRODUCE OR COPY IT
III NOT TO REVEAL OR PUBLISH IT IN WHOLE OR PART
IV ALL RIGHTS RESERVED

WWW.AliSaler.Com

Debug Stuff Was Here

BOM_COST_GROUP=DEBUG

SYNC_MASTER=J68_MLB SYNC_DATE=08/26/2015

PAGE TITLE

External A USB3 Connector

Apple Inc.

DRAWING NUMBER 051-00647

SIZE D

REVISION 10.0.0

BRANCH dvt-fab10

PAGE 47 OF 145

SHEET 44 OF 121

NOTICE OF PROPRIETARY PROPERTY:

THE INFORMATION CONTAINED HEREIN IS THE PROPRIETARY PROPERTY OF APPLE INC.
THE POSESSOR AGREES TO THE FOLLOWING:

I TO MAINTAIN THIS DOCUMENT IN CONFIDENCE

II NOT TO REPRODUCE OR COPY IT

III NOT TO REVEAL OR PUBLISH IT IN WHOLE OR PART

IV ALL RIGHTS RESERVED

WWW.AliSaler.Com

ISOLATE FROM OTHER COMPONENTS/NETS AS MUCH AS POSSIBLE

MOJAVE 16V BOOST

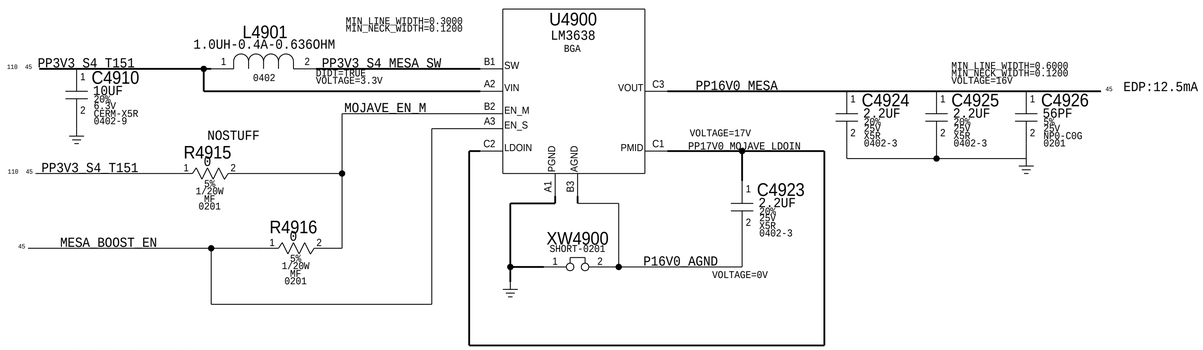

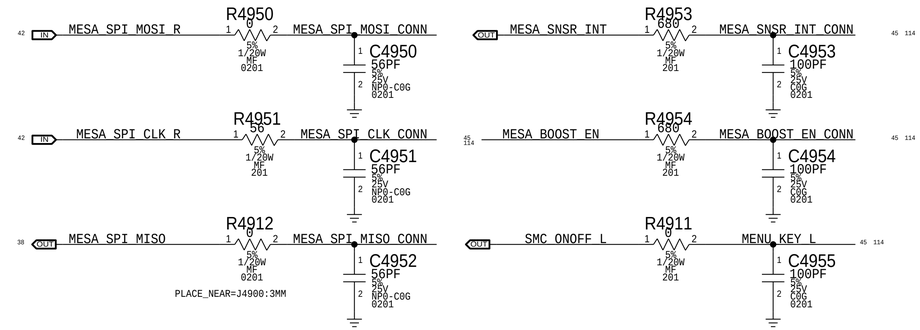

3.0V MESA

Option to feed LDO from 5V in case of dropout issue

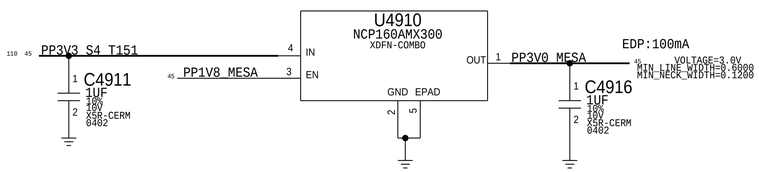

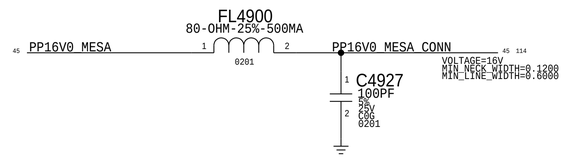

MESA FLEX CONNECTOR

Proto1 Connector for X434/X435 Support
PLUG (516S00115) - X434/ X435 Jumper
Recptacle (516S00203) - X362/X363 MLB

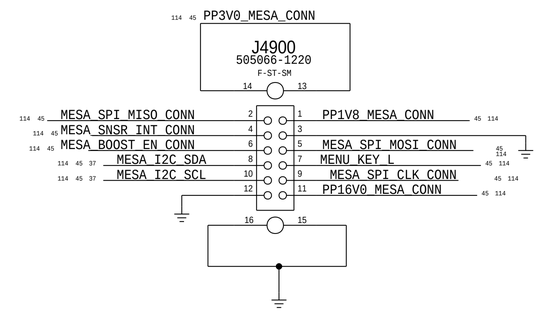

Mesa Power Sequencing Requirements

Power On: 1V8 -> 3V3 -> 16V0

1.8V MESA

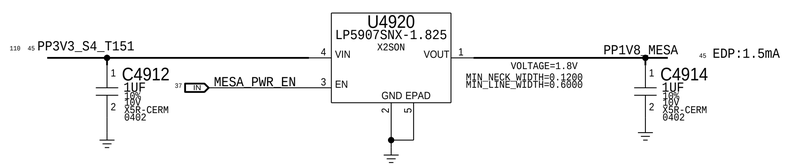

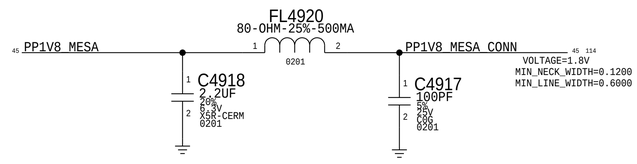

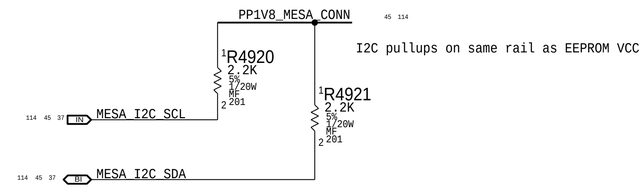

I2C pullups on same rail as EEPROM VCC

FL4910
80-OHM-25%-500MA
0201
PP3V0_MESA
PP3V0_MESA_CONN
VOLTAGE=3.0V
MIN_LINE_WIDTH=0.6000
MIN_NECK_WIDTH=0.1200
C4920 2.2UF 20% 6.3V X5R-CERM 0201
C4921 2.2UF 20% 6.3V X5R-CERM 0201
C4922 2.2UF 20% 6.3V X5R-CERM 0201
C4928 0.1UF 10% 16V X5R-CERM 0201
C4929 100PF 5% 25V C0G 0201

BOM_COST_GROUP=T151

PAGE TITLE	MESA
Apple Inc.	DRAWING NUMBER 051-00647 SIZE D
	REVISION 10.0.0
NOTICE OF PROPRIETARY PROPERTY: THE INFORMATION CONTAINED HEREIN IS THE PROPRIETARY PROPERTY OF APPLE INC. THE POSESSOR AGREES TO THE FOLLOWING: I TO MAINTAIN THIS DOCUMENT IN CONFIDENCE II NOT TO REPRODUCE OR COPY IT III NOT TO REVEAL OR PUBLISH IT IN WHOLE OR PART IV ALL RIGHTS RESERVED	BRANCH dvt-fab10
	PAGE 49 OF 145
	SHEET 45 OF 121

WWW.AliSaler.Com

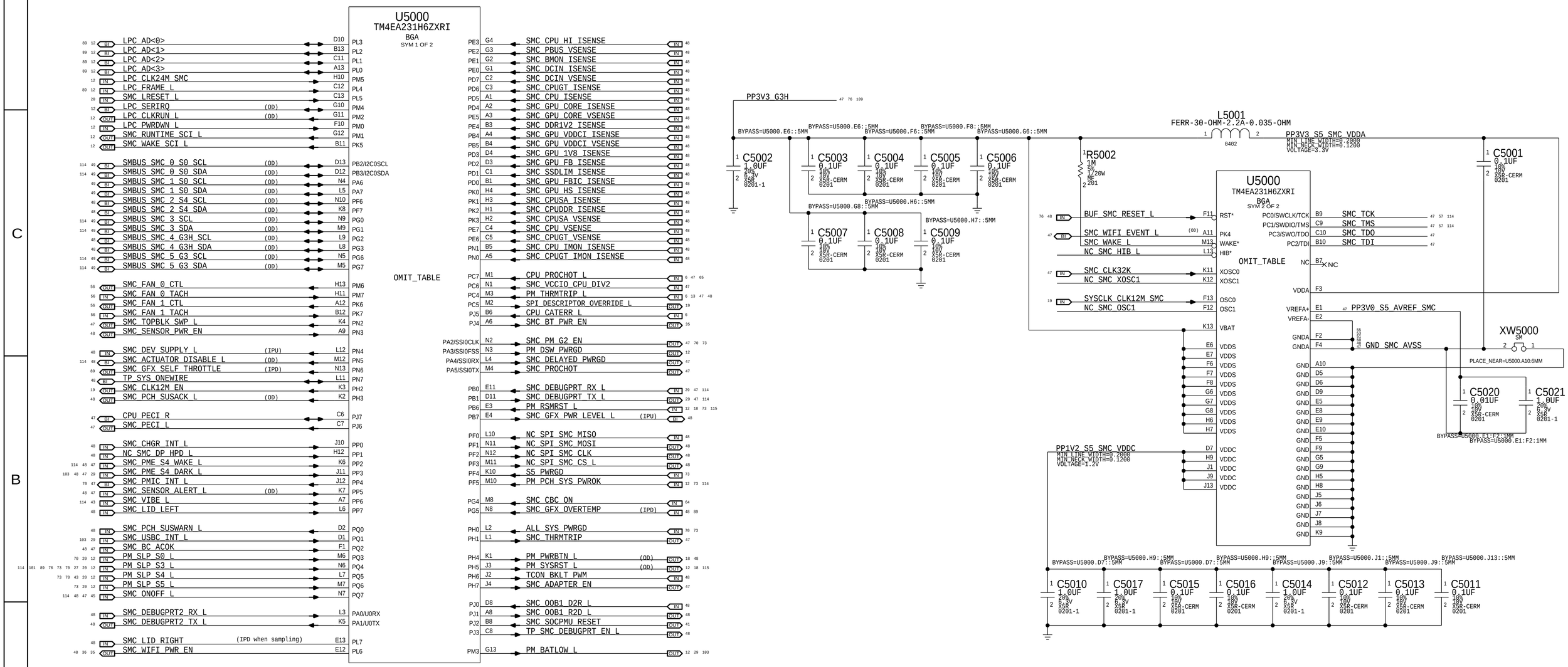

NOTE:
SMS Interrupt can be active high or low, rename net accordingly.
If SMS interrupt is not used, pull up to SMC rail.

NOTE:
Unused pins have "SMC_Pxx" names. Unused
pins designed as outputs can be left floating,
those designated as inputs require pull-ups.

BOM_COST_GROUP=SMC

PAGE TITLE
SMC

Apple Inc.

DRAWING NUMBER 051-00647
SIZE D
REVISION 10.0.0
BRANCH dvt-fab10
PAGE 50 OF 145
SHEET 46 OF 121

NOTICE OF PROPRIETARY PROPERTY:
THE INFORMATION CONTAINED HEREIN IS THE PROPRIETARY PROPERTY OF APPLE INC.
THE POSESSOR AGREES TO THE FOLLOWING:
I TO MAINTAIN THIS DOCUMENT IN CONFIDENCE
II NOT TO REPRODUCE OR COPY IT
III NOT TO REVEAL OR PUBLISH IT IN WHOLE OR PART
IV ALL RIGHTS RESERVED

WWW.AliSaler.Com

SMC AVREF Supply

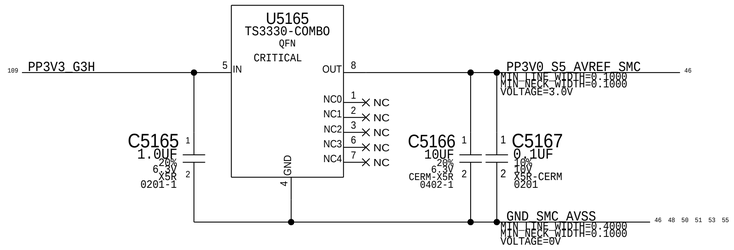

PROCHOT/THRMTRIP Support

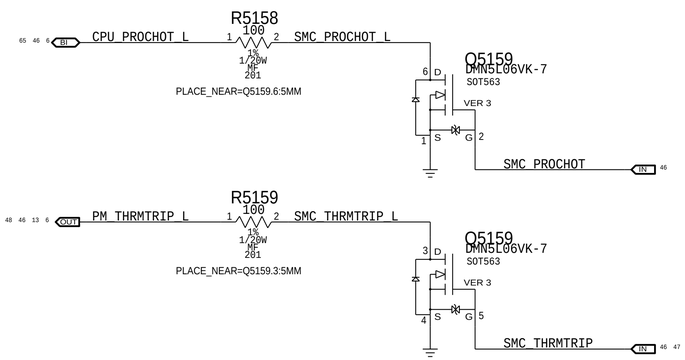

PECI Support

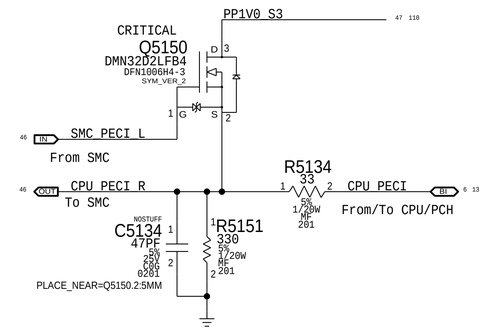

Top-Block Swap

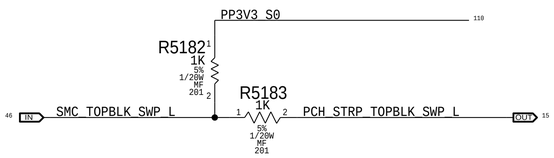

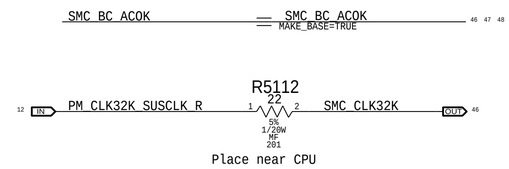

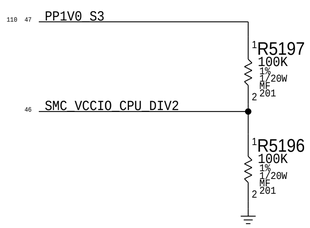

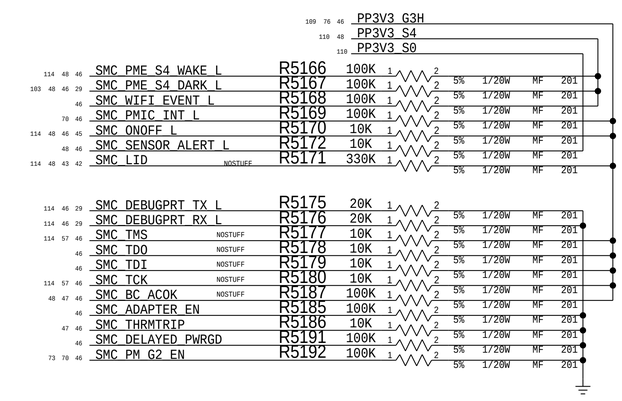

BOM_COST_GROUP=SMC

SYNC_MASTER=J80_ZIFENGSHEN_MLB_BAFFIN SYNC_DATE=11/19/2015

PAGE TITLE
SMC Shared Support

Apple Inc.

DRAWING NUMBER 051-00647 SIZE D
REVISION 10.0.0
BRANCH dvt-fab10
PAGE 51 OF 145
SHEET 47 OF 121

NOTICE OF PROPRIETARY PROPERTY:
THE INFORMATION CONTAINED HEREIN IS THE PROPRIETARY PROPERTY OF APPLE INC.
THE POSESSOR AGREES TO THE FOLLOWING:
I TO MAINTAIN THIS DOCUMENT IN CONFIDENCE
II NOT TO REPRODUCE OR COPY IT
III NOT TO REVEAL OR PUBLISH IT IN WHOLE OR PART
IV ALL RIGHTS RESERVED

WWW.AliSaler.Com

SMC12 ADC Assignments

SMC_CPU_HI_ISENSE	SMC_CPU_HI_ISENSE	MAKE_BASE=TRUE	50
SMC_PBUS_VSENSE	SMC_PBUS_VSENSE	MAKE_BASE=TRUE	50
SMC_BMON_ISENSE	SMC_BMON_ISENSE	MAKE_BASE=TRUE	50
SMC_DCIN_ISENSE	SMC_DCIN_ISENSE	MAKE_BASE=TRUE	50
SMC_DCIN_VSENSE	SMC_DCIN_VSENSE	MAKE_BASE=TRUE	50
SMC_CPUGT_ISENSE	SMC_CPUGT_ISENSE	MAKE_BASE=TRUE	53
SMC_CPU_ISENSE	SMC_CPU_ISENSE	MAKE_BASE=TRUE	51
SMC_GPU_CORE_ISENSE	SMC_GPU_CORE_ISENSE	MAKE_BASE=TRUE	55
SMC_GPU_CORE_VSENSE	SMC_GPU_CORE_VSENSE	MAKE_BASE=TRUE	55
SMC_DDR1V2_ISENSE	SMC_DDR1V2_ISENSE	MAKE_BASE=TRUE	51
SMC_GPU_VDDCI_ISENSE	SMC_GPU_VDDCI_ISENSE	MAKE_BASE=TRUE	55
SMC_GPU_VDDCI_VSENSE	SMC_GPU_VDDCI_VSENSE	MAKE_BASE=TRUE	55
SMC_GPU_1V8_ISENSE	SMC_GPU_1V8_ISENSE	MAKE_BASE=TRUE	55
SMC_GPU_FB_ISENSE	SMC_GPU_FB_ISENSE	MAKE_BASE=TRUE	55
SMC_SSDLIM_ISENSE	SMC_SSDLIM_ISENSE	MAKE_BASE=TRUE	53
SMC_GPU_FBIC_ISENSE	SMC_GPU_FBIC_ISENSE	MAKE_BASE=TRUE	55
SMC_GPU_HS_ISENSE	SMC_GPU_HS_ISENSE	MAKE_BASE=TRUE	55
SMC_CPUSA_ISENSE	SMC_CPUSA_ISENSE	MAKE_BASE=TRUE	53
SMC_CPUDDR_ISENSE	SMC_CPUDDR_ISENSE	MAKE_BASE=TRUE	51
SMC_CPUSA_VSENSE	SMC_CPUSA_VSENSE	MAKE_BASE=TRUE	53
SMC_CPU_VSENSE	SMC_CPU_VSENSE	MAKE_BASE=TRUE	55
SMC_CPUGT_VSENSE	SMC_CPUGT_VSENSE	MAKE_BASE=TRUE	55
SMC_CPU_IMON_ISENSE	SMC_CPU_IMON_ISENSE	MAKE_BASE=TRUE	51 55
SMC_CPUGT_IMON_ISENSE	SMC_CPUGT_IMON_ISENSE	MAKE_BASE=TRUE	53 55

SMC12 Pin Assignments

SMC_GFX_PWR_LEVEL_L	SMC_GFX_PWR_LEVEL_L	MAKE_BASE=TRUE	89
TP_SYS_ONEWIRE	TP_SYS_ONEWIRE	MAKE_BASE=TRUE	
TP_SMC_DEBUGPRT_EN_L	TP_SMC_DEBUGPRT_EN_L	MAKE_BASE=TRUE	
NC_SMC_DP_HPD_L	NC_SMC_DP_HPD_L	MAKE_BASE=TRUE	

PM_THRMTRIP_L

CRITICAL
Q5290
DMN32D2LFB4
DFN1006H4-3
SYM_VER_2

SMC_GFX_OVERTEMP

NC_SPI_SMC_MISO	NC_SPI_SMC_MISO	115	TRUE
NC_SPI_SMC_MOSI	NC_SPI_SMC_MOSI	115	TRUE
NC_SPI_SMC_CLK	NC_SPI_SMC_CLK	115	TRUE
NC_SPI_SMC_CS_L	NC_SPI_SMC_CS_L	115	TRUE

SMC_PCH_SUSWARN_L (MAKE_BASE=TRUE)	SMC_PCH_SUSWARN_L	IN	12
SMC_PCH_SUSACK_L (MAKE_BASE=TRUE)	SMC_PCH_SUSACK_L	OUT	12
SMC_SENSOR_PWR_EN (MAKE_BASE=TRUE)	SMC_SENSOR_PWR_EN		74
	SMC_SENSOR_PWR_EN		50
PM_PWRBTN_L (MAKE_BASE=TRUE)	PM_PWRBTN_L		12
	SMC_BC_ACOK		64
SMC_BC_ACOK (MAKE_BASE=TRUE)	SMC_BC_ACOK		50
SMBUS_SMC_4_G3H_SCL (MAKE_BASE=TRUE)	SMBUS_SMC_4_G3H_SCL		46
SMBUS_SMC_4_G3H_SDA (MAKE_BASE=TRUE)	SMBUS_SMC_4_G3H_SDA		46
SMBUS_SMC_2_S4_SCL (MAKE_BASE=TRUE)	SMBUS_SMC_2_S4_SCL		46
SMBUS_SMC_2_S4_SDA (MAKE_BASE=TRUE)	SMBUS_SMC_2_S4_SDA		46
SMC_OOB1_D2R_L (MAKE_BASE=TRUE)	SMC_OOB1_D2R_L		77 80 114
SMC_OOB1_R2D_L (MAKE_BASE=TRUE)	SMC_OOB1_R2D_L		77 80 114
SMC_ACTUATOR_DISABLE_L (MAKE_BASE=TRUE)	SMC_ACTUATOR_DISABLE_L		43
SMC_CHGR_INT_L (MAKE_BASE=TRUE)	SMC_CHGR_INT_L		64

Debug Power "Buttons"

PLACE_SIDE=TOP
SILK_PART=PWR_BTN
R5226
RES
0603-NSP

BOMOPTION=OMIT

SMC_ONOFF_L

SW5200
EVQPUA02K

BOMOPTION=DBG_BTN
SILK_PART=PWR_BTN
PLACE_SIDE=BOTTOM

Debug RESET "Buttons"

BOMOPTION=DBG_BTN
PLACE_SIDE=BOTTOM
SILK_PART=RESET_BTN
CRITICAL
SW5227
SOX-152HNT
SM

SMC_RESET_L

Thermal Alerts

SMC_CPUHI_COMP_ALERT_L	R5217 100 (NOSTUFF)		
CPUTHMSNS_THM_L	R5216 100	CPUTHRM_THRM:SMC	
CPUTHMSNS_ALERT_L	R5214 100	CPUTHRM_ALRT:SMC	
TBTTHMSNS_X_THM_L	R5220 100	TBTTHRM_THRM:SMC	
TBTTHMSNS_T_THM_L	R5221 100	TBTTHRM_THRM:SMC	
TBTTHMSNS_X_ALERT_L	R5210 100	TBTTHRM_ALRT:SMC	
TBTTHMSNS_T_ALERT_L	R5211 100	TBTTHRM_ALRT:SMC; SMC_SENSOR_ALERT_L	46 47

BYPASS=U5256.5::5MM
PP3V3_G3H 43 109

R5256 100K 5% 1/20W MF 201
C5256 0.1UF 10% 16V X5R-CERM 0201

SMC_LSOC_RST_L 114 43
SMC_ONOFF_L 114 48 47 46 45

U5256
SN74LVC1G02
SOT553-5
CRITICAL

SMC_4FINGERS_RST 64

S4 SMC Wake Sources

SMC_PME_S4_WAKE_L	SMC_PME_S4_WAKE_L (MAKE_BASE=TRUE)	46 47 114
SMC_PME_S4_DARK_L	SMC_PME_S4_DARK_L (MAKE_BASE=TRUE)	29 46 47 103

R5258 0 5% 1/20W MF 201 LID_FEATURE_ON

SMC_LID_LEFT 46

PP3V3_G3H 109 48
BYPASS=U5255.6::5MM
C5255 0.1UF 10% 16V X5R-CERM 0201

R5257 0 5% 1/20W MF 201 LID_FEATURE_OFF

U5255
74LVC1G32
SOT891
CRITICAL

SMC_LID_LEFT_R 48
SMC_LID_RIGHT 48 46

R5255 10K 5% 1/20W MF 201

SMC_LID 42 43 47 114

NC

R5259 0 5% 1/20W MF 201
SMC_DEV_SUPPLY_L 46 — SMC_DEV_SUPPLY_R_L 114

R5260 10 5% 1/20W MF 201
TCON_BKLT_PWM 46 — BKLT_PWM_TCON2MLB 76 114

C5257 3300PF 10% 16V X7R-CERM 0201
NOSTUFF

NOSTUFF
C5270 1000PF 10% 16V X7R-CERM 0201
BUF_SMC_RESET_L 46 76
GND_SMC_AVSS 46 47 50 51 53 55

BOM_COST_GROUP=SMC

Hall Effect Pads - Left

J5250
AMR-MLB-X502
SM
OMIT_TABLE

HALL_SENSOR_LEFT
PP3V3_G3H 48 109

C5250 1000PF 10% 16V X7R-1 0201
NOSTUFF

R5252 10K 5% 1/20W MF 201
SMC_LID_LEFT_R 48

Hall Effect Pads - Right

J5260
AMR-MLB-X502
SM
OMIT_TABLE

HALL_SENSOR_RIGHT
PP3V3_G3H 48 109

C5260 1000PF 10% 16V X7R-1 0201
NOSTUFF

R5253 10K 5% 1/20W MF 201
SMC_LID_RIGHT 46 48

Specify one of these BOM GROUPs.

BOM GROUP	BOM OPTIONS
CPUTHRM:BOTH	CPUTHRM_THRM:SMC,CPUTHRM_ALRT:SMC
CPUTHRM:THRM	CPUTHRM_THRM:SMC
CPUTHRM:ALRT	CPUTHRM_ALRT:SMC

Specify one of these BOM GROUPs.

BOM GROUP	BOM OPTIONS
TBTTHRM:BOTH	TBTTHRM_THRM:SMC,TBTTHRM_ALRT:SMC
TBTTHRM:THRM	TBTTHRM_THRM:SMC,TBTTHRM_ALRT:PU
TBTTHRM:ALRT	TBTTHRM_THRM:PU,TBTTHRM_ALRT:SMC
TBTTHRM:NONE	TBTTHRM_THRM:PU,TBTTHRM_ALRT:PU

PP3V3_S4 110 47

R5274 100K 5% 1/20W MF 201
R5273 10K 5% 1/20W MF 201

PLACE_SIDE=BOTTOM
NOSTUFF
R5275 0 5% 1/20W MF 0201
SMC_DEBUGPRT2_TX_L 46 — WLAN_UART_RX 35

PLACE_SIDE=BOTTOM
NOSTUFF
R5276 0 5% 1/20W MF 0201
SMC_DEBUGPRT2_RX_L 46 — WLAN_UART_TX 35

PP3V3_G3H 109

R5280 100K 5% 1/20W MF 201
R5281 10K 5% 1/20W MF 201

PLACE_SIDE=BOTTOM
R5277 0 5% 1/20W MF 0201
SMC_DEBUGPRT2_R_TX — TP5200 (TP-P6)

R5278 0 5% 1/20W MF 0201
SMC_DEBUGPRT2_R_RX — TP5201 (TP-P6)
PLACE_SIDE=BOTTOM

SMC_WIFI_PWR_EN 46 36 35	R5295 10K 5% 1/20W MF 201	NOSTUFF	
SMC_SENSOR_PWR_EN 48 46	R5294 10K 5% 1/20W MF 201	NOSTUFF	

PAGE TITLE
SMC Project Support

Apple Inc.

DRAWING NUMBER 051-00647 SIZE D
REVISION 10.0.0
BRANCH dvt-fab10
PAGE 52 OF 145
SHEET 48 OF 121

NOTICE OF PROPRIETARY PROPERTY:
THE INFORMATION CONTAINED HEREIN IS THE PROPRIETARY PROPERTY OF APPLE INC.
THE POSESSOR AGREES TO THE FOLLOWING:
I TO MAINTAIN THIS DOCUMENT IN CONFIDENCE
II NOT TO REPRODUCE OR COPY IT
III NOT TO REVEAL OR PUBLISH IT IN WHOLE OR PART
IV ALL RIGHTS RESERVED

WWW.AliSaler.Com

LYNX POINT LP S0 "SMBus 0" Connections

PP3V3_S0

LYNX POINT LP
U0500
(MASTER)
SMBUS_PCH_CLK (MAKE_BASE=TRUE)
SMBUS_PCH_DATA (MAKE_BASE=TRUE)

R5300 1K 5% 1/20W MF 201
R5301 1K 5% 1/20W MF 201

DPMUX Connections

DPMUX IC
U9800
(MASTER)
NC_I2C_DPMUX_A_SCL — NC_I2C_DPMUX_A_SCL (MAKE_BASE=TRUE)
NC_I2C_DPMUX_A_SDA — NC_I2C_DPMUX_A_SDA (MAKE_BASE=TRUE)

DPMUX Connections

PP3V3_S0

DPMUX IC
U9800
(MASTER)
I2C_DPMUX_UC_SCL — I2C_DPMUX_UC_SCL (MAKE_BASE=TRUE)
I2C_DPMUX_UC_SDA — I2C_DPMUX_UC_SDA (MAKE_BASE=TRUE)

R5305 2.0K 5% 1/20W MF 201
R5306 2.0K 5% 1/20W MF 201

LYNX POINT LP S0 "SMLink 0" Connections

PP3V3_S0

LYNX POINT LP
U0500
(MASTER)
SML_PCH_0_CLK (MAKE_BASE=TRUE)
SML_PCH_0_DATA (MAKE_BASE=TRUE)

R5310 8.2K 5% 1/20W MF 201
R5311 8.2K 5% 1/20W MF 201

LYNX POINT LP S0 "SMLink 1" Connections

LYNX POINT LP
U0500
(Write: 0x88 Read: 0x89)
SMBUS_SMC_1_S0_SCL
SMBUS_SMC_1_S0_SDA

SMLink 1 is slave port to access PCH.

SMC SMBus "0" S0 Connections

PP3V3_S0

SMC
U5000
(MASTER)
SMBUS_SMC_0_S0_SCL (MAKE_BASE=TRUE)
SMBUS_SMC_0_S0_SDA (MAKE_BASE=TRUE)

R5350 1.5K 5% 1/20W MF 201
R5351 1.5K 5% 1/20W MF 201

Internal DP
J8500
16 addresses
(Write: 0x20 Read: 0x21)
thru
(Write: 0x3E Read: 0x3F)
(when VRR_FLAG = 0)
SMBUS_SMC_0_S0_SCL
SMBUS_SMC_0_S0_SDA

SMC SMBus "2" S4 Connections

PP3V3_S4

SMC
U5000
(MASTER)
SMBUS_SMC_2_S4_SCL
SMBUS_SMC_2_S4_SDA

R5370 1K 5% 1/20W MF 201
R5371 1K 5% 1/20W MF 201

Berkelium
U4200
(Write: 0x78 Read: 0x79)
SMBUS_SOC_PMU_SCL
SMBUS_SOC_PMU_SDA

EADC1
U5700
(Write: 0x10 Read: 0x11)
SMBUS_SMC_2_S4_SCL
SMBUS_SMC_2_S4_SDA

EADC2
U5710
(Write: 0x14 Read: 0x15)
SMBUS_SMC_2_S4_SCL
SMBUS_SMC_2_S4_SDA

MAKE_BASE=TRUE
SMBUS_SOC_PMU_SCL
SMBUS_SOC_PMU_SDA
MAKE_BASE=TRUE

R5373 0 5% 1/20W MF 0201

UGLY HACK

R5372 0 5% 1/20W MF 0201

SMC SMBus "1" S0 Connections

PP3V3_S0

SMC
U5000
(MASTER)
SMBUS_SMC_1_S0_SCL (MAKE_BASE=TRUE)
SMBUS_SMC_1_S0_SDA (MAKE_BASE=TRUE)

R5360 2.0K 5% 1/20W MF 201
R5361 2.0K 5% 1/20W MF 201

CPU, Mem, Airflow, Fixstack Prox
TMP513AISAR:U5870
(Write: 0xB8 Read: 0xB9)
SMBUS_SMC_1_S0_SCL
SMBUS_SMC_1_S0_SDA

GPU THERM
TMP442A: UA960
(Write: 0x98 Read: 0x99)
SMBUS_SMC_1_S0_SCL
SMBUS_SMC_1_S0_SDA

GPU
UA000
(Write: 0x82 Read: 0x83)
SMBUS_SMC_1_S0_SCL
SMBUS_SMC_1_S0_SDA

SMC SMBus "5" G3H Connections

PP3V3_G3H

SMC
U5000
(MASTER)
SMBUS_SMC_5_G3_SCL (MAKE_BASE=TRUE)
SMBUS_SMC_5_G3_SDA (MAKE_BASE=TRUE)

R5380 2.0K 5% 1/20W MF 201
R5381 2.0K 5% 1/20W MF 201

Battery Charger
ISL6259 - U7000
(Write: 0x12 Read: 0x13)
SMBUS_SMC_5_G3_SCL
SMBUS_SMC_5_G3_SDA

Banjo
U7800
(Write: 0x68 Read: 0x69)
SMBUS_SMC_5_G3_SCL
SMBUS_SMC_5_G3_SDA

Battery
J6950
(Write: 0x16 Read: 0x17)
SMBUS_SMC_5_G3_SCL
SMBUS_SMC_5_G3_SDA

SMC SMBus "3" S0 Connections

PP3V3_S0

SMC
U5000
(MASTER)
SMBUS_SMC_3_SCL (MAKE_BASE=TRUE)
SMBUS_SMC_3_SDA (MAKE_BASE=TRUE)

R5390 2.0K 5% 1/20W MF 201
R5391 2.0K 5% 1/20W MF 201

X100 Temp
TMP105: J9510
(Write: 0x92 Read: 0x93)
SMBUS_SMC_3_SCL
SMBUS_SMC_3_SDA

Trackpad
J4501
(Write: 0x99 Read: 0x98)
SMBUS_SMC_3_SCL
SMBUS_SMC_3_SDA

TBT & Airflow Left
TMP461: U5850
(Write: 0x90 Read: 0x91)
SMBUS_SMC_3_SCL
SMBUS_SMC_3_SDA

CARBON
U6000
(Write: 0xD5 Read: 0xD4)
SMBUS_SMC_3_SCL
SMBUS_SMC_3_SDA

TBT & Airflow Right
TMP461: U5800
(Write: 0x96 Read: 0x97)
SMBUS_SMC_3_SCL
SMBUS_SMC_3_SDA

SMC SMBUS "4" G3H CONNECTIONS

PP3V3_G3H

SMC
U5000
(MASTER)
SMBUS_SMC_4_G3H_SCL (MAKE_BASE=TRUE)
SMBUS_SMC_4_G3H_SDA (MAKE_BASE=TRUE)

R5320 1.5K 5% 1/20W MF 201
R5321 1.5K 5% 1/20W MF 201

USB-C PORT CONTROLLER XA
CD3215A (ACE) - U3100
(WRITE: 0X70 READ: 0X71)
SMBUS_SMC_4_G3H_SCL
SMBUS_SMC_4_G3H_SDA

USB-C PORT CONTROLLER TA
CD3215A (ACE) - UB300
(WRITE: 0X40 READ: 0X41)
SMBUS_SMC_4_G3H_SCL
SMBUS_SMC_4_G3H_SDA

USB-C PORT CONTROLLER XB
CD3215A (ACE) - U3200
(WRITE: 0X7E READ: 0X7F)
SMBUS_SMC_4_G3H_SCL
SMBUS_SMC_4_G3H_SDA

USB-C PORT CONTROLLER TB
CD3215A (ACE) - UB400
(WRITE: 0X4E READ: 0X4F)
SMBUS_SMC_4_G3H_SCL
SMBUS_SMC_4_G3H_SDA

BOM_COST_GROUP=SMC

PAGE TITLE
SMBus Connections

Apple Inc.

DRAWING NUMBER 051-00647
SIZE D
REVISION 10.0.0
BRANCH dvt-fab10
PAGE 53 OF 145
SHEET 49 OF 121

NOTICE OF PROPRIETARY PROPERTY:
THE INFORMATION CONTAINED HEREIN IS THE PROPRIETARY PROPERTY OF APPLE INC.
THE POSESSOR AGREES TO THE FOLLOWING:
I TO MAINTAIN THIS DOCUMENT IN CONFIDENCE
II NOT TO REPRODUCE OR COPY IT
III NOT TO REVEAL OR PUBLISH IT IN WHOLE OR PART
IV ALL RIGHTS RESERVED

WWW.AliSaler.Com

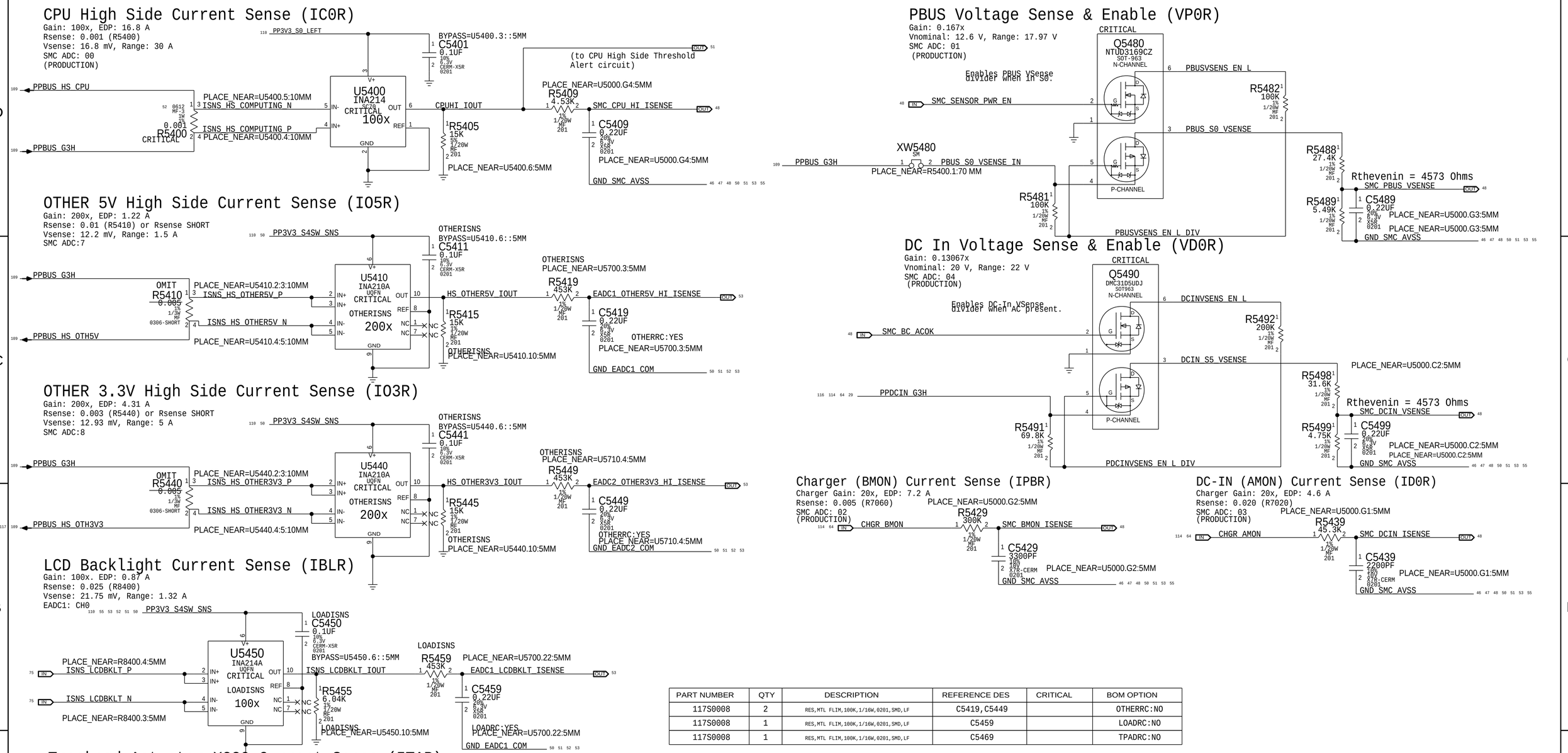

PART NUMBER	QTY	DESCRIPTION	REFERENCE DES	CRITICAL	BOM OPTION
117S0008	2	RES,MTL FLIM,100K,1/16W,0201,SMD,LF	C5419,C5449		OTHERRC:NO
117S0008	1	RES,MTL FLIM,100K,1/16W,0201,SMD,LF	C5459		LOADRC:NO
117S0008	1	RES,MTL FLIM,100K,1/16W,0201,SMD,LF	C5469		TPADRC:NO

WWW.AliSaler.Com

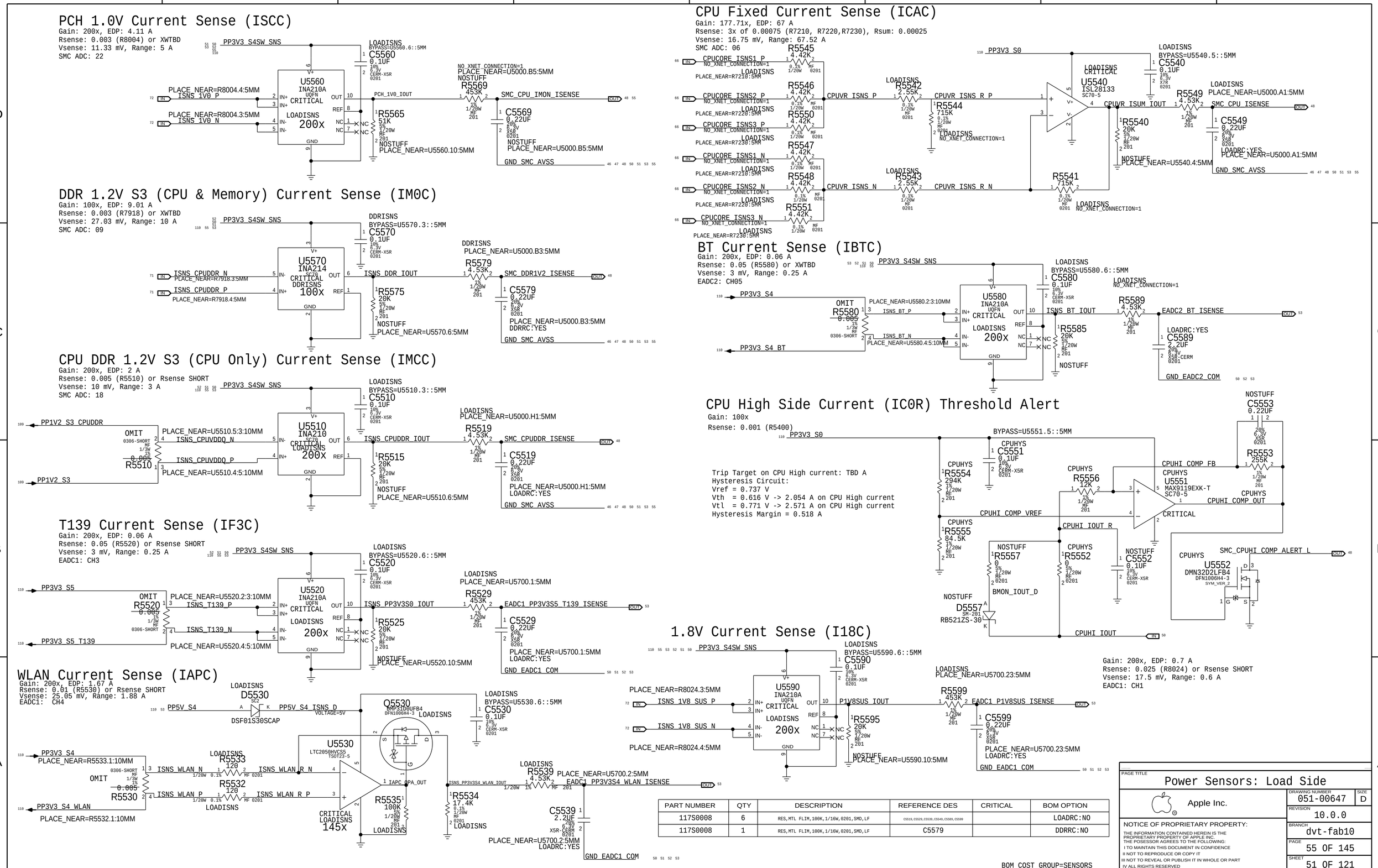

PART NUMBER	QTY	DESCRIPTION	REFERENCE DES	CRITICAL	BOM OPTION
117S0008	6	RES,MTL FLIM,100K,1/16W,0201,SMD,LF	C5519,C5529,C5539,C5549,C5589,C5599		LOADRC:NO
117S0008	1	RES,MTL FLIM,100K,1/16W,0201,SMD,LF	C5579		DDRRC:NO

BOM_COST_GROUP=SENSORS

PAGE TITLE
Power Sensors: Load Side

Apple Inc.

DRAWING NUMBER 051-00647 SIZE D
REVISION 10.0.0
BRANCH dvt-fab10
PAGE 55 OF 145
SHEET 51 OF 121

NOTICE OF PROPRIETARY PROPERTY:
THE INFORMATION CONTAINED HEREIN IS THE PROPRIETARY PROPERTY OF APPLE INC.
THE POSESSOR AGREES TO THE FOLLOWING:
I TO MAINTAIN THIS DOCUMENT IN CONFIDENCE
II NOT TO REPRODUCE OR COPY IT
III NOT TO REVEAL OR PUBLISH IT IN WHOLE OR PART
IV ALL RIGHTS RESERVED

WWW.AliSaler.Com

T139 5V Current Sense (IF5C)

Gain: 200x, EDP: 0.004 A
Rsense: 0.05 (R5630) or Rsense SHORT
Vsense: 0.2 mV, Range: 0.25 A
EADC1: CH6

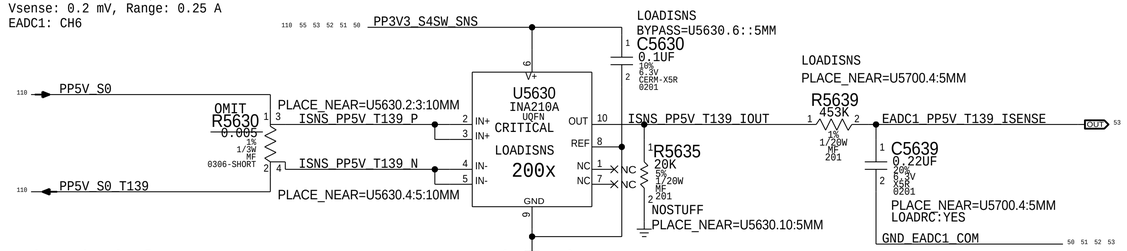

Thunderbolt TBT LEFT Current Sense (IULC)

Gain: 200x. EDP: 0.5 A
Rsense: 0.025 (R5640) or Rsense SHORT
Vsense: 12.5 mV, Range: 0.5 A
EADC1: CH7

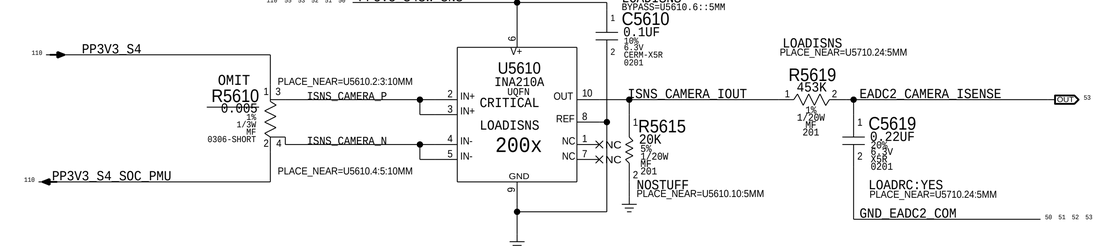

LCD Panel Current Sense (ILDC)

Gain: 200x. EDP: 1 A
RSENSE: 0.01 (R8520) or Rsense SHORT
Vsense: 5 mV, Range: 1.25 A
EADC2: CH0

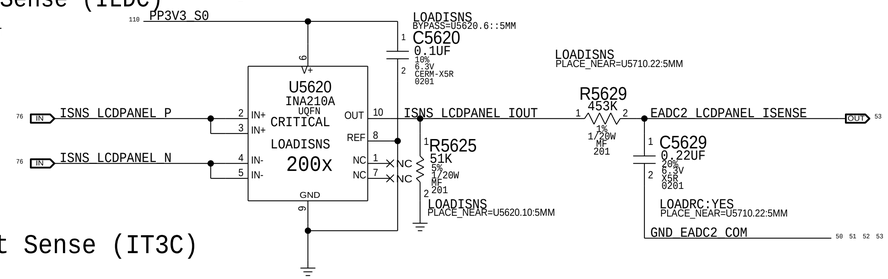

Trackpad 3V Current Sense (IT3C)

Gain: 200x, EDP: 0.2 A
Rsense: 0.05 (R5650) or Rsense SHORT
Vsense: 10 mV, Range: 0.25 A
EADC2: CH1

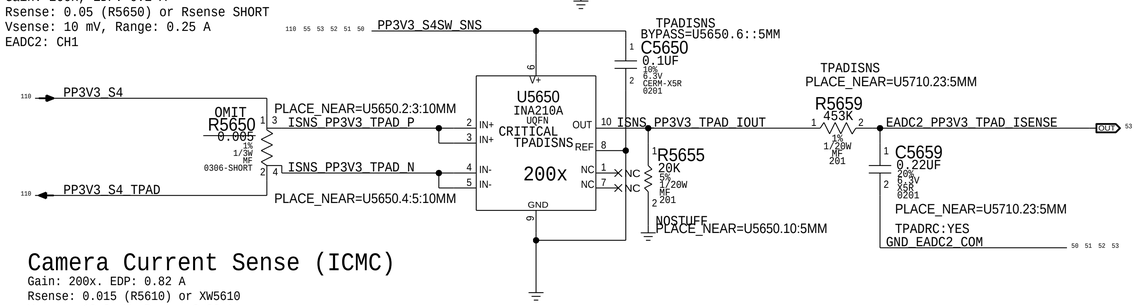

Camera Current Sense (ICMC)

Gain: 200x. EDP: 0.82 A
Rsense: 0.015 (R5610) or XW5610
Vsense: 12.3 mV, Range: 0.83 A
EADC2: CH2

CPU High Side (IC0R) Peak Detection Support

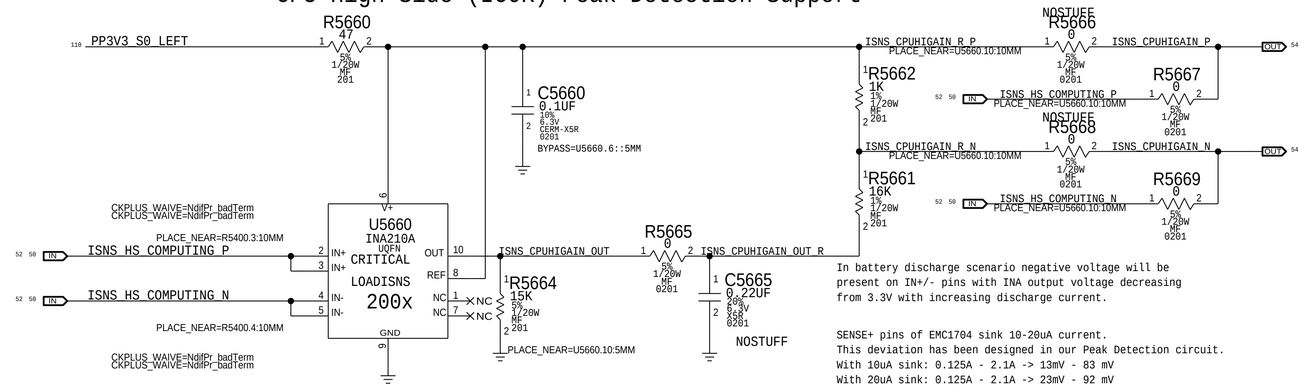

In battery discharge scenario negative voltage will be present on IN+/- pins with INA output voltage decreasing from 3.3V with increasing discharge current.

SENSE+ pins of EMC1704 sink 10-20uA current.
This deviation has been designed in our Peak Detection circuit.
With 10uA sink: 0.125A - 2.1A -> 13mV - 83 mV
With 20uA sink: 0.125A - 2.1A -> 23mV - 92 mV

Thunderbolt TBT RIGHT Current Sense (IURC)

Gain: 200x. EDP: 0.5 A
Rsense: 0.025 (R5680) or Rsense SHORT
Vsense: 12.5 mV, Range: 0.5 A
EADC1: CH2

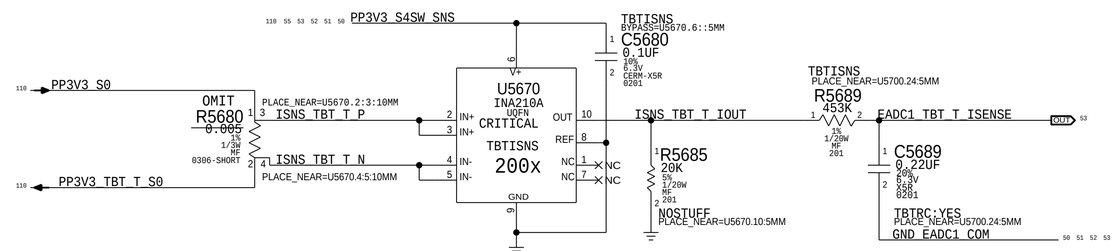

T151 Current Sense (IIDC)

Gain: 200x, EDP: 0.1638 A
Rsense: 0.05 (R5690) or Rsense SHORT
Vsense: 819 mV, Range: 0.25 A
EADC2: CH4

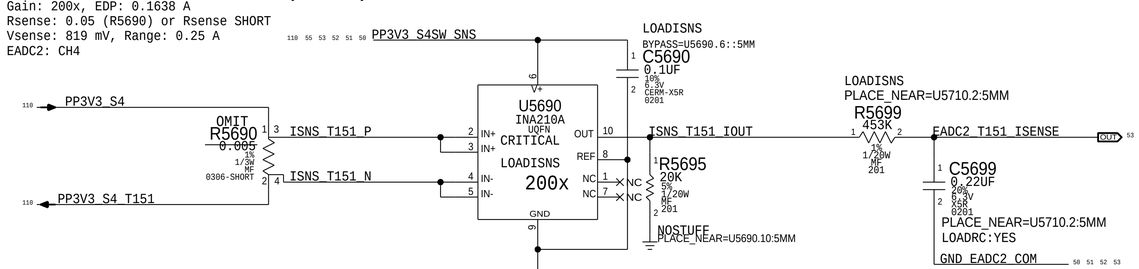

PART NUMBER	QTY	DESCRIPTION	REFERENCE DES	CRITICAL	BOM OPTION
117S0008	4	RES,MTL FILM,100K,1/16W,0201,SMD,LF	C5619,C5629,C5639,C5699		LOADRC:NO
117S0008	2	RES,MTL FILM,100K,1/16W,0201,SMD,LF	C5649,C5689		TBTRC:NO
117S0008	1	RES,MTL FLIM,100K,1/16W,0201,SMD,LF	C5659		TPADRC:NO

BOM_COST_GROUP=SENSORS

PAGE TITLE: Power Sensors: Extended

Apple Inc.

DRAWING NUMBER: 051-00647 SIZE: D
REVISION: 10.0.0
BRANCH: dvt-fab10
PAGE: 56 OF 145
SHEET: 52 OF 121

NOTICE OF PROPRIETARY PROPERTY:
THE INFORMATION CONTAINED HEREIN IS THE PROPRIETARY PROPERTY OF APPLE INC.
THE POSESSOR AGREES TO THE FOLLOWING:
I TO MAINTAIN THIS DOCUMENT IN CONFIDENCE
II NOT TO REPRODUCE OR COPY IT
III NOT TO REVEAL OR PUBLISH IT IN WHOLE OR PART
IV ALL RIGHTS RESERVED

WWW.AliSaler.Com

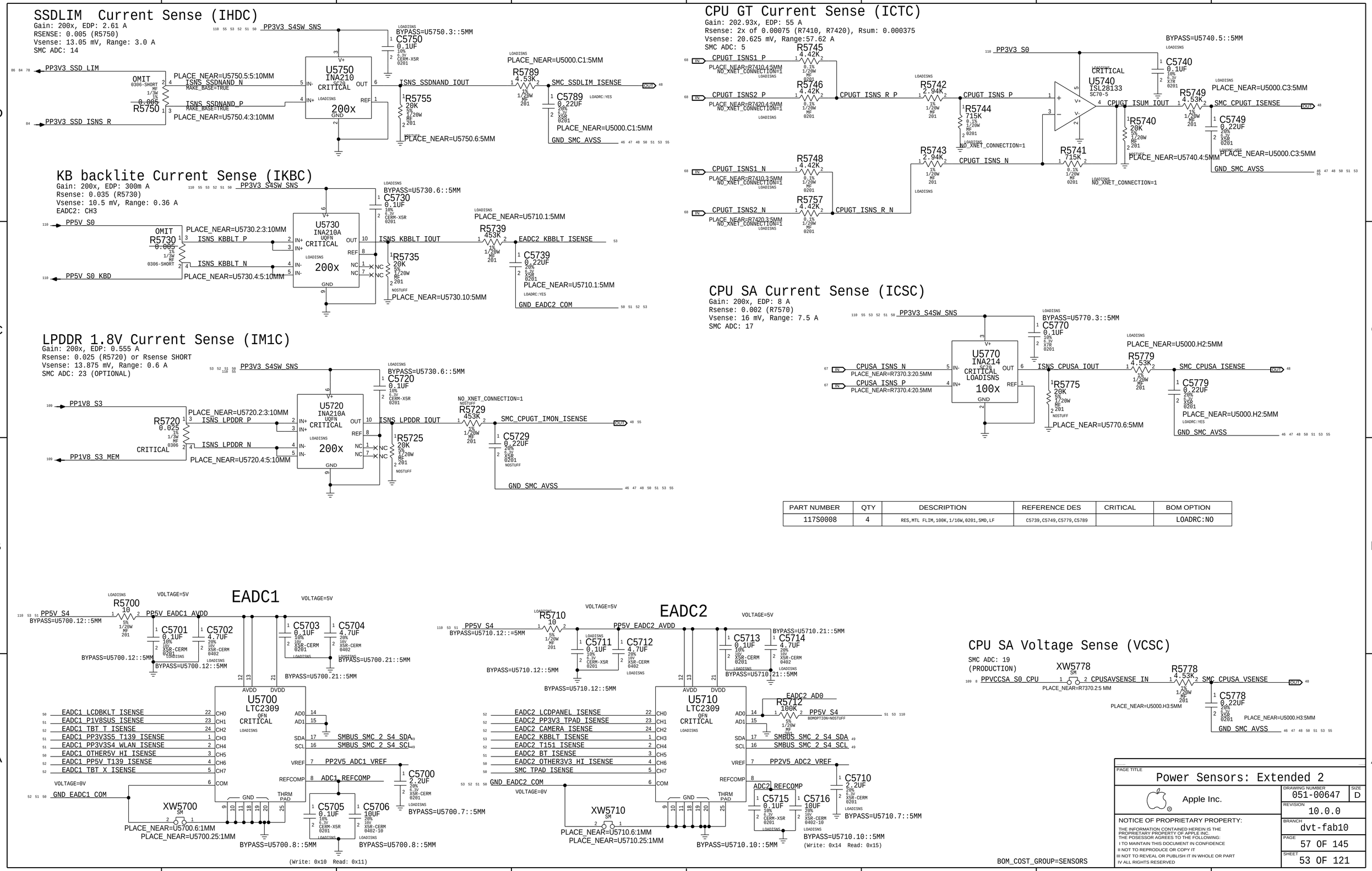

PART NUMBER	QTY	DESCRIPTION	REFERENCE DES	CRITICAL	BOM OPTION
117S0008	4	RES,MTL FLIM,100K,1/16W,0201,SMD,LF	C5739,C5749,C5779,C5789		LOADRC:NO

WWW.AliSaler.Com

Thermal Sensor A: Thunderbolt Die, Airflow Left

I2C Write: 0xD8, I2C Read: 0xD9

Thermal Diode: TBT Die (TTLD)

Placement Note:
The P leg connects to THERMDA pin of the TBT chip, the N leg connect to pin AC22.

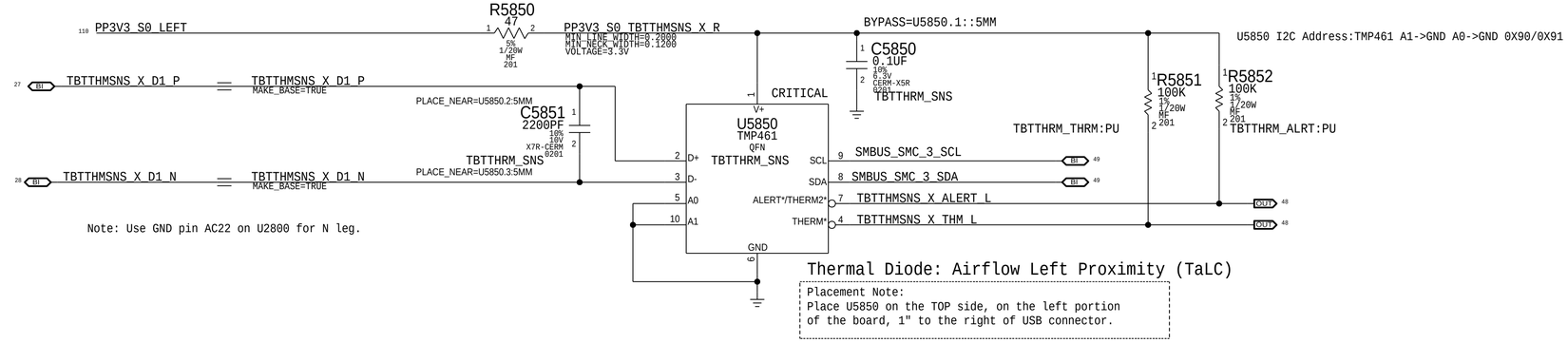

Thermal Diode: Airflow Left Proximity (TaLC)

Placement Note:
Place U5850 on the TOP side, on the left portion of the board, 1" to the right of USB connector.

Thermal Sensor C: Thunderbolt Die, Air Flow Right

I2C Write: 0x98, I2C Read: 0x99

Thermal Diode: TBT Die (TTRD)

Placement Note:
The P leg connects to THERMDA pin of the TBT chip, the N leg connect to pin AC22.

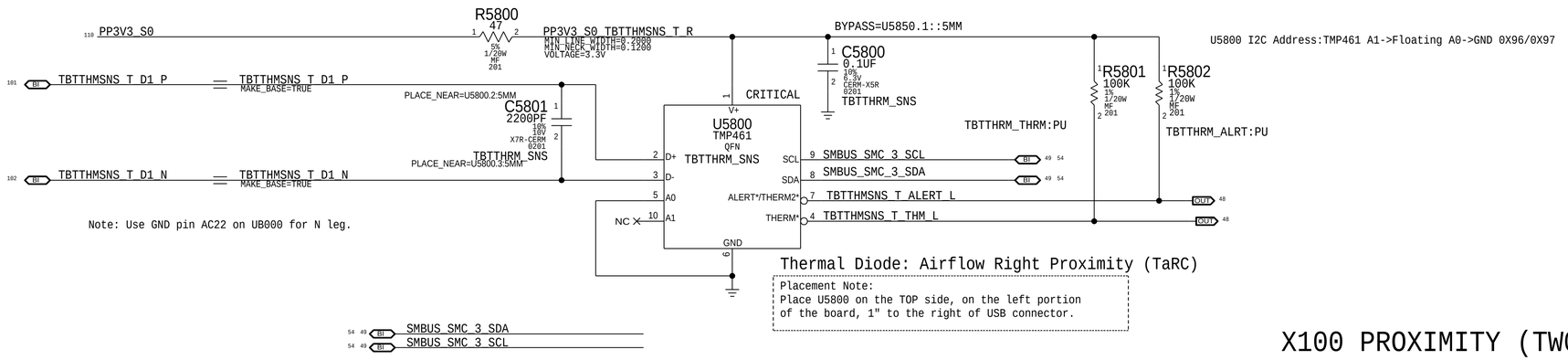

Thermal Diode: Airflow Right Proximity (TaRC)

Placement Note:
Place U5800 on the TOP side, on the left portion of the board, 1" to the right of USB connector.

X100 PROXIMITY (TW0P)

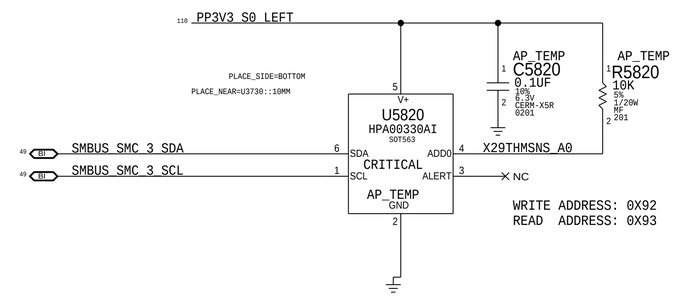

Placement note:
PLACE U5820 ON BOTTOM NEAR X100

Thermal Sensor B & CPU High Peak Detection: CPU Proximity, Memory Proximity, Fin Stack Left, Fin Stack Right

I2C Write: 0x98, I2C Read: 0x99

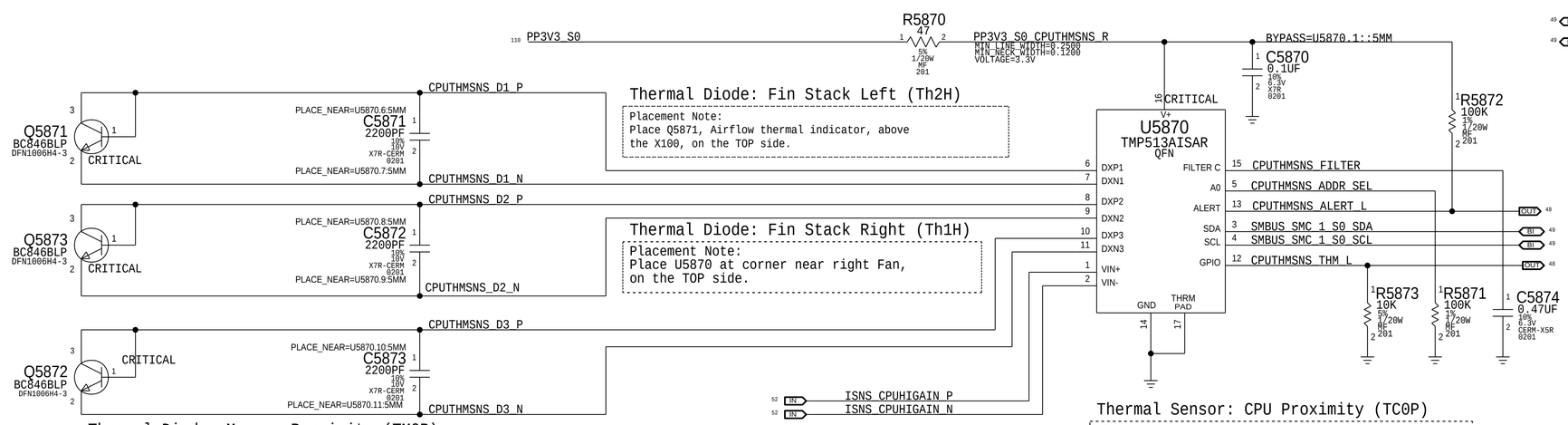

Thermal Diode: Fin Stack Left (Th2H)

Placement Note:
Place Q5871, Airflow thermal indicator, above the X100, on the TOP side.

Thermal Diode: Fin Stack Right (Th1H)

Placement Note:
Place U5870 at corner near right Fan, on the TOP side.

Thermal Diode: Memory Proximity (TM0P)

Placement Note:
Place Q5872 between two rows of Memory devices, between channel A and B, on the BOTTOM side.

Thermal Sensor: CPU Proximity (TC0P)

Placement Note:
Place Q5873 under the CPU, on the BOTTOM side.

I2C ADDRESS (U5870): 0XB8/0XB9

BOM_COST_GROUP=SENSORS

PAGE TITLE	Thermal Sensors
Apple Inc.	DRAWING NUMBER 051-00647 SIZE D
	REVISION 10.0.0
	BRANCH dvt-fab10
	PAGE 58 OF 145
	SHEET 54 OF 121

NOTICE OF PROPRIETARY PROPERTY:
THE INFORMATION CONTAINED HEREIN IS THE PROPRIETARY PROPERTY OF APPLE INC.
THE POSESSOR AGREES TO THE FOLLOWING:
I TO MAINTAIN THIS DOCUMENT IN CONFIDENCE
II NOT TO REPRODUCE OR COPY IT
III NOT TO REVEAL OR PUBLISH IT IN WHOLE OR PART
IV ALL RIGHTS RESERVED

WWW.AliSaler.Com

SENSORS: EXTENDER 3

CPU Core Voltage Sense (VCAC)

SMC ADC: 20
(PRODUCTION)

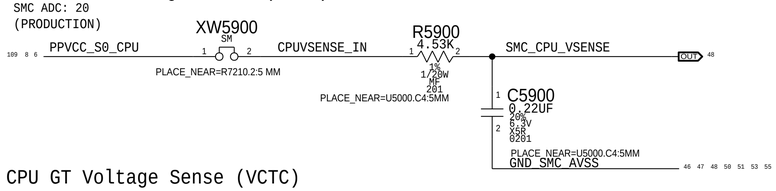

CPU GT Voltage Sense (VCTC)

SMC ADC: 21
(PRODUCTION)

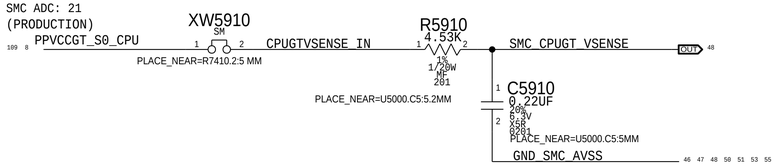

CPU Core IMON Current Sense (ICAM)

Gain: 1 A / 17.123 mV, Range: 67 A.
SMC ADC: 22

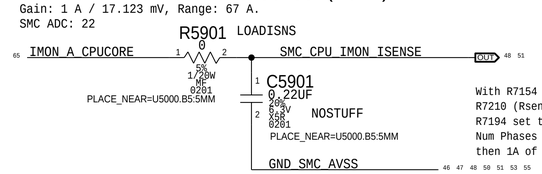

With R7154 (Ri) set to 365 Ohm,
R7210 (Rsen) set to 0.75 mOhm,
R7194 set to 100 kOhm,
Num Phases (N) is 3, and Io (ICCmax) is 67A,
then 1A of Io gives 17.123mV at the Vimon.

CPU GT IMON Current Sense (ICTM)

Gain: 1 A / 21.701 mV, Range: 64 A.
SMC ADC: 23

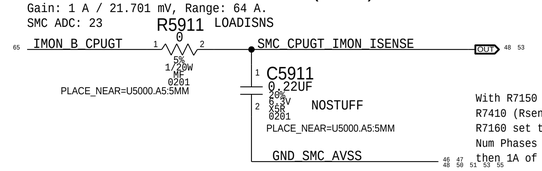

With R7150 (Ri) set to 432 Ohm,
R7410 (Rsen) set to 0.75 mOhm,
R7160 set to 100 kOhm,
Num Phases (N) is 2, and Io (ICCmax) is 55A,
then 1A of Io gives 21.701mV at the Vimon.

GPU CORE Voltage Sense (VG0C)

SMC ADC: 8
(PRODUCTION)

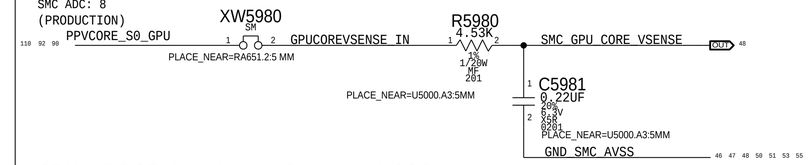

GPU VDDCI Voltage Sense (VG2C)

SMC ADC: 11
(PRODUCTION)

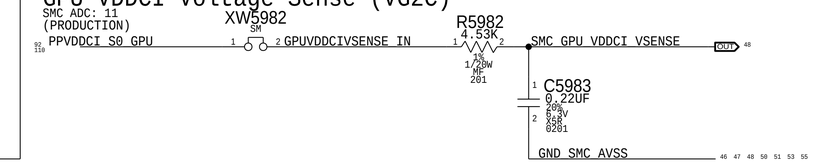

GPU SENSORS

GPU CORE Current Sense (IG0C)

Gain: 122.01x, EDP: 64.2 A
Rsense: 2x of 0.00075 (RA651, RA641), Rsum: 0.000375
Vsense: 22.875 mV, Range: 65.57 A
SMC ADC: 7

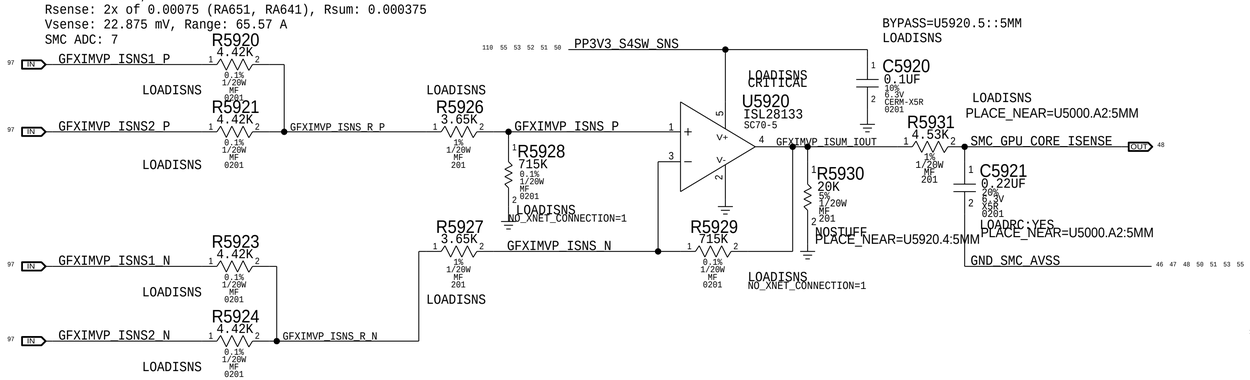

GPU FB Current Sense (IG1C)

Gain: 100x, EDP: 10.7 A
Rsense: 0.002 (RA300)
Vsense: 16 mV, Range: 15 A
SMC ADC: 13

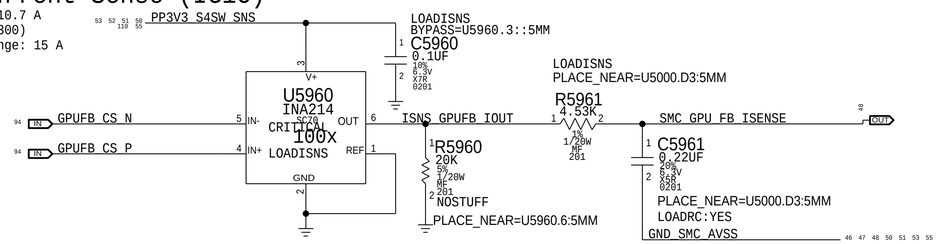

GPU FB IC Current Sense (IG4C)

Gain: 200x, EDP: 4.8 A
Rsense: 0.005 (R5970)
Vsense: 10 mV, Range: 3 A
SMC ADC: 15

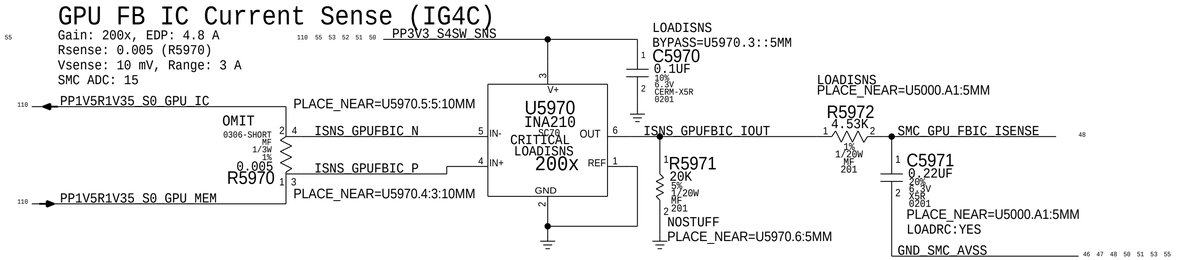

GPU VDDCI Current Sense (IG2C)

Gain: 100x, EDP: 9.7 A
Rsense: 0.003 (RA368)
Vsense: 24 mV, Range: 10 A
SMC ADC: 10

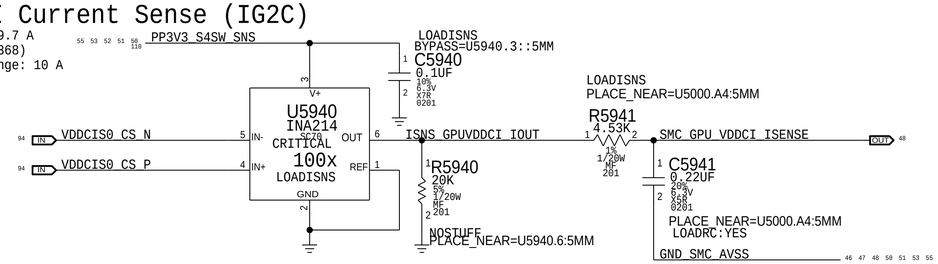

GPU HIGH SIDE Current Sense (IG0R)

Gain: 200x, EDP: 4 A
Rsense: 0.002 (R5990) or Rsense SHORT
Vsense: 8 mV, Range: 7.5 A
SMC ADC: 16
(PRODUCTION)

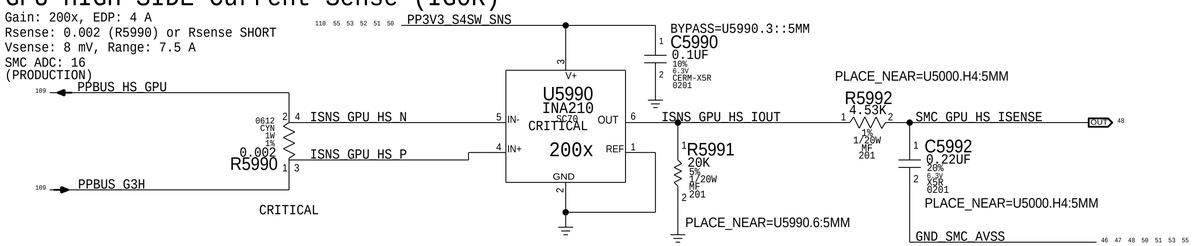

GPU 1V8 Current Sense (IG3C)

Gain: 200x, EDP: 2.3 A
Rsense: 0.005 (R5950)
Vsense: 7.5 mV, Range: 3 A
SMC ADC: 12

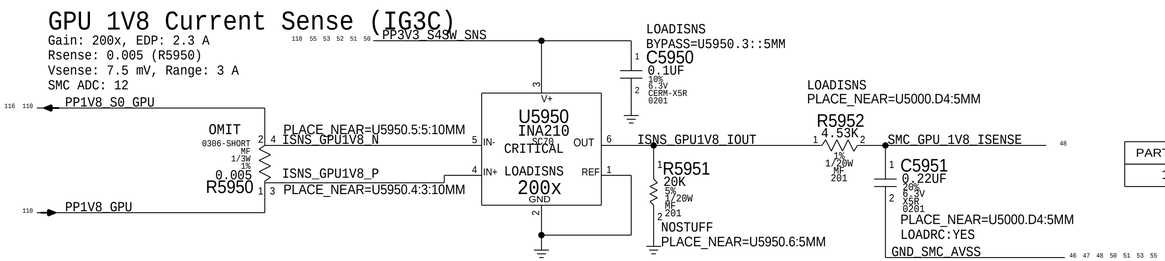

PART NUMBER	QTY	DESCRIPTION	REFERENCE DES	CRITICAL	BOM OPTION
117S0008	5	RES,MTL FLIM,100K,1/16W,0201,SMD,LF	C5921,C5941,C5951,C5961,C5971		LOADRC:NO

BOM_COST_GROUP=SENSORS

PAGE TITLE
Sensor Extended 3

Apple Inc.

DRAWING NUMBER 051-00647
SIZE D
REVISION 10.0.0
BRANCH dvt-fab10
PAGE 59 OF 145
SHEET 55 OF 121

NOTICE OF PROPRIETARY PROPERTY:
THE INFORMATION CONTAINED HEREIN IS THE PROPRIETARY PROPERTY OF APPLE INC.
THE POSESSOR AGREES TO THE FOLLOWING:
I TO MAINTAIN THIS DOCUMENT IN CONFIDENCE
II NOT TO REPRODUCE OR COPY IT
III NOT TO REVEAL OR PUBLISH IT IN WHOLE OR PART
IV ALL RIGHTS RESERVED

WWW.AliSaler.Com

FAN CONNECTOR

KEEP THE 5 PIN CONNECTOR FROM D1

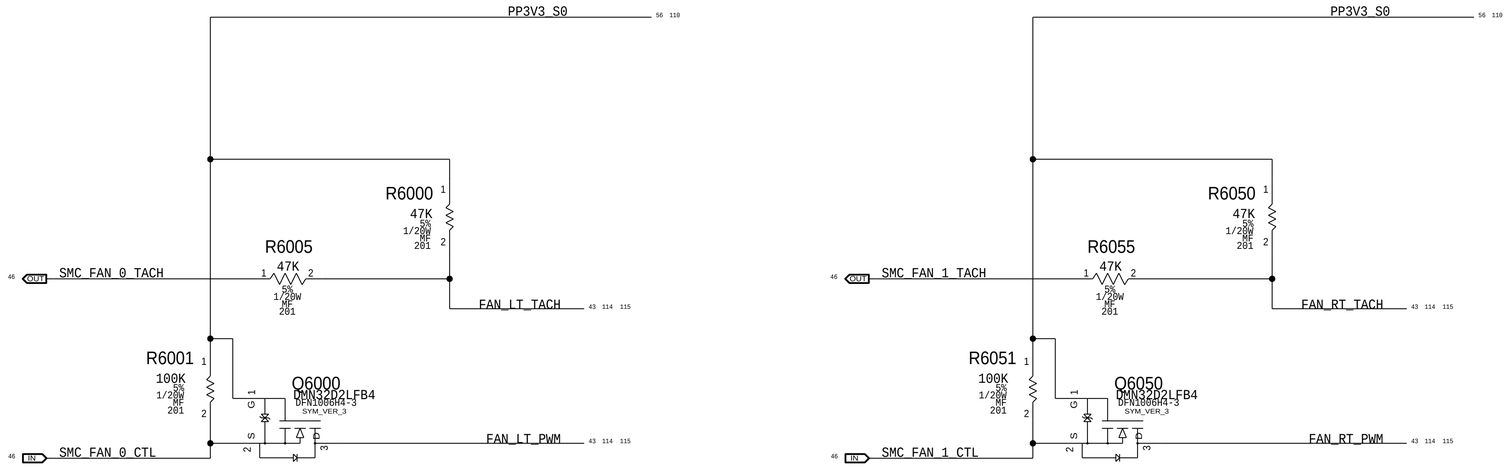

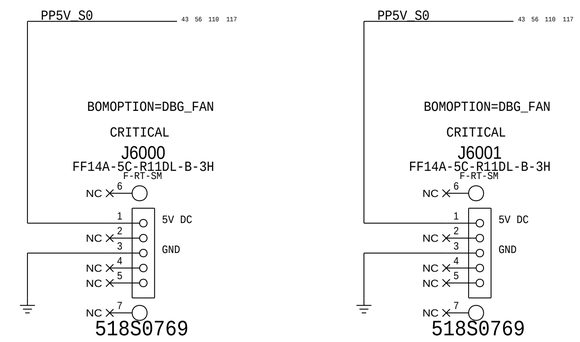

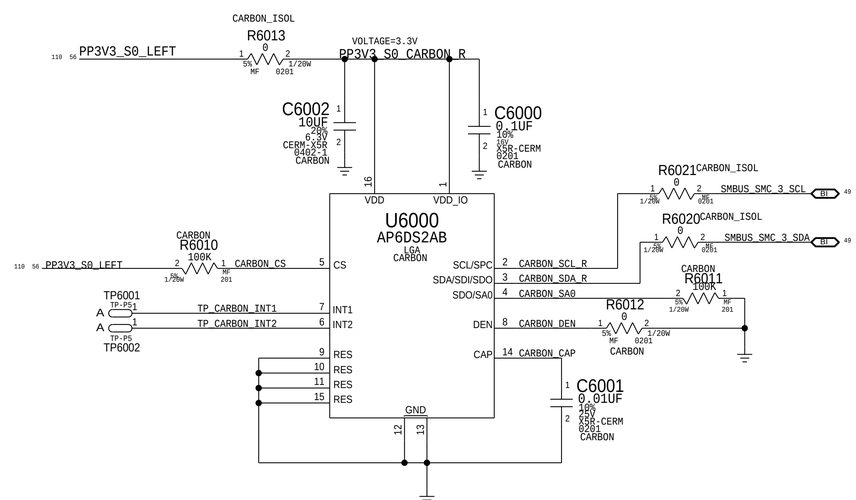

BOM_COST_GROUP=FAN

PAGE TITLE	Fans
Apple Inc.	DRAWING NUMBER 051-00647
	SIZE D
	REVISION 10.0.0
	BRANCH dvt-fab10
	PAGE 60 OF 145
	SHEET 56 OF 121

NOTICE OF PROPRIETARY PROPERTY:
THE INFORMATION CONTAINED HEREIN IS THE PROPRIETARY PROPERTY OF APPLE INC.
THE POSESSOR AGREES TO THE FOLLOWING:
I TO MAINTAIN THIS DOCUMENT IN CONFIDENCE
II NOT TO REPRODUCE OR COPY IT
III NOT TO REVEAL OR PUBLISH IT IN WHOLE OR PART
IV ALL RIGHTS RESERVED

WWW.AliSaler.Com

SPI ROM

Quad-IO Mode (Mode 0 & 3) supported.
SPI Frequency: 50MHz for CPU, 20MHz for SMC.

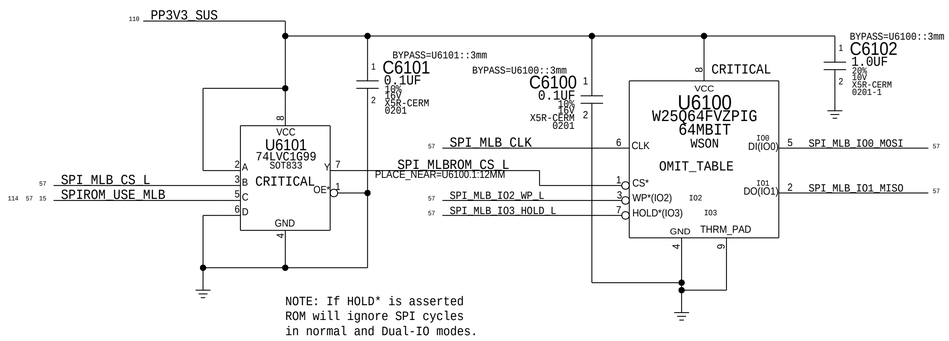

NOTE: If HOLD* is asserted
ROM will ignore SPI cycles
in normal and Dual-IO modes.

Quad SPI and QPI instructions require the non-volatile Quad Enable bit (QE)
in Status Register-2 to be set. When QE=1, the /WP pin becomes IO2 and /HOLD pin becomes IO3.

SPI+SWD SAM Connector

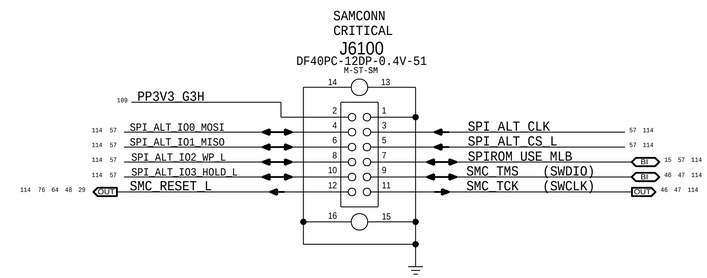

SPI Bus Series Termination (Modified per PDG)

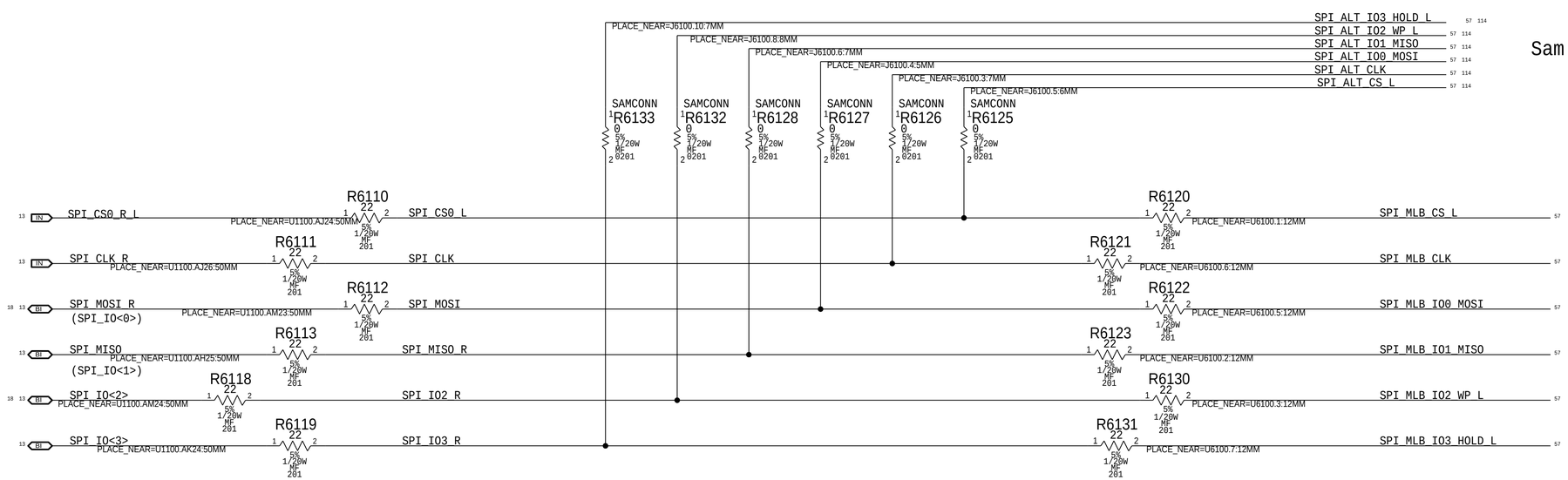

BOM_COST_GROUP=CPU & CHIPSET

SYNC_MASTER=J80_MLB	SYNC_DATE=11/06/2015
PAGE TITLE: SPI Debug Connector	
Apple Inc.	DRAWING NUMBER: 051-00647 / SIZE: D
	REVISION: 10.0.0
NOTICE OF PROPRIETARY PROPERTY: THE INFORMATION CONTAINED HEREIN IS THE PROPRIETARY PROPERTY OF APPLE INC. THE POSESSOR AGREES TO THE FOLLOWING: I TO MAINTAIN THIS DOCUMENT IN CONFIDENCE II NOT TO REPRODUCE OR COPY IT III NOT TO REVEAL OR PUBLISH IT IN WHOLE OR PART IV ALL RIGHTS RESERVED	BRANCH: dvt-fab10
	PAGE: 61 OF 145
	SHEET: 57 OF 121

WWW.AliSaler.Com

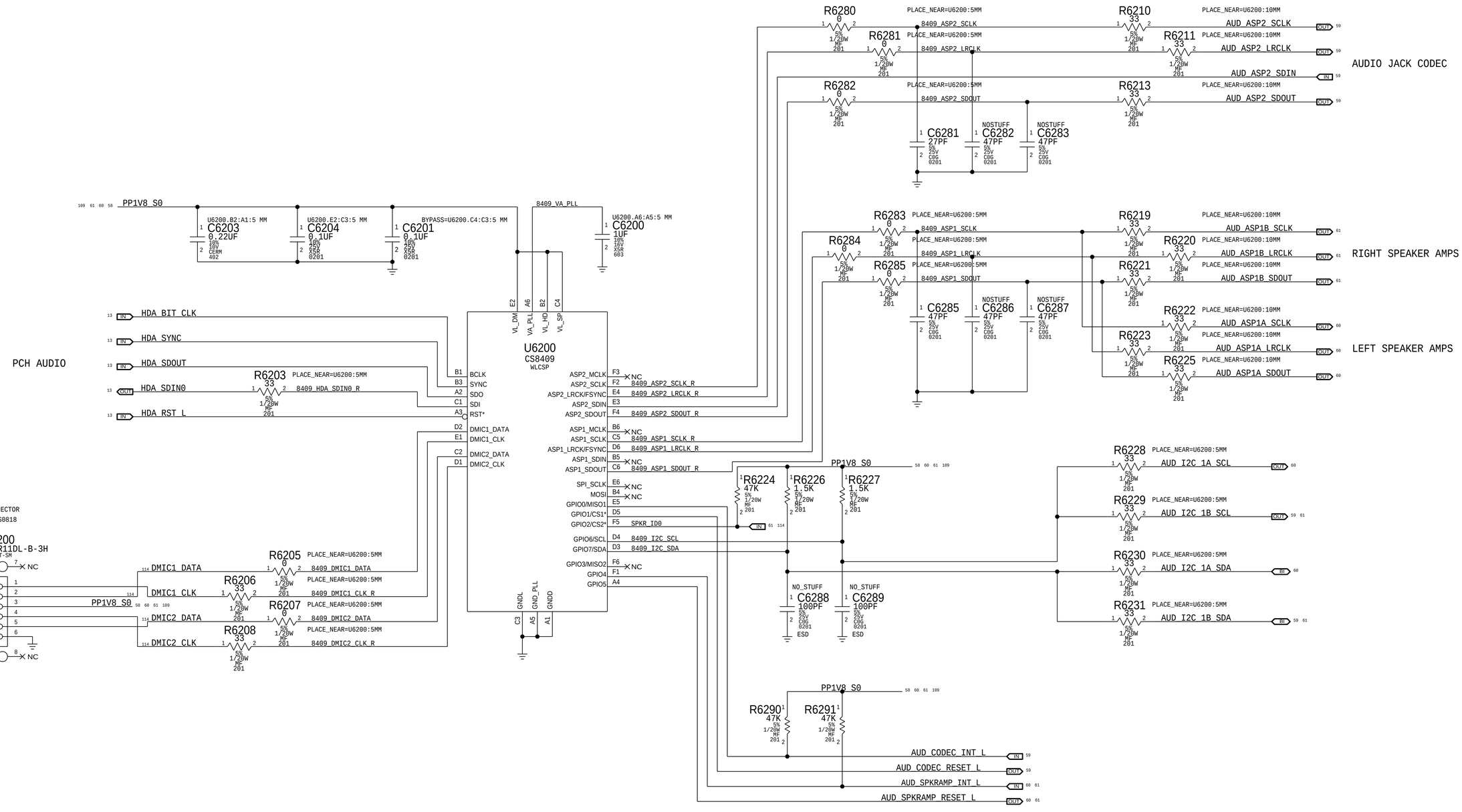

BOM_COST_GROUP=AUDIO

PAGE TITLE: HDA Bridge

Apple Inc.

DRAWING NUMBER: 051-00647 SIZE: D

REVISION: 10.0.0

BRANCH: dvt-fab10

PAGE: 62 OF 145

SHEET: 58 OF 121

NOTICE OF PROPRIETARY PROPERTY:
THE INFORMATION CONTAINED HEREIN IS THE PROPRIETARY PROPERTY OF APPLE INC.
THE POSESSOR AGREES TO THE FOLLOWING:
I TO MAINTAIN THIS DOCUMENT IN CONFIDENCE
II NOT TO REPRODUCE OR COPY IT
III NOT TO REVEAL OR PUBLISH IT IN WHOLE OR PART
IV ALL RIGHTS RESERVED

WWW.AliSaler.Com

AUDIO JACK CODEC I2C ADDRESS

AD1	AD0	ADDRESS
GND	GND	0x48 <--
GND	1.8V	0x49
1.8V	GND	0x4A
1.8V	1.8V	0x4B

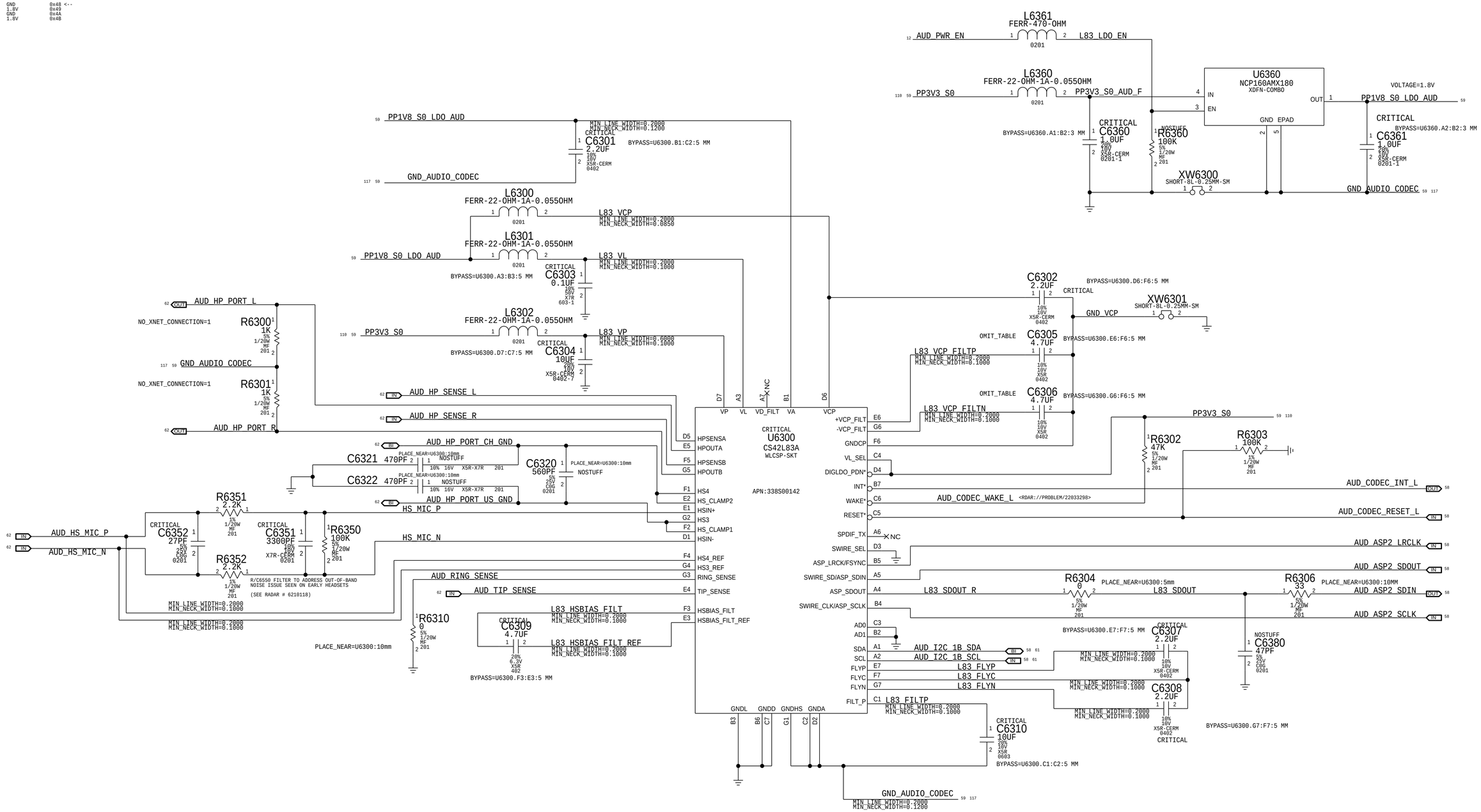

PART NUMBER	QTY	DESCRIPTION	REFERENCE DES	CRITICAL	BOM OPTION
138S0719	2	CAP,CER,4.7UF,20%,10V,X5R,0402,MURATA	C6305,C6306	CRITICAL	

BOM_COST_GROUP=AUDIO

PAGE TITLE
AUDIO JACK CODEC

Apple Inc.

DRAWING NUMBER 051-00647 SIZE D
REVISION 10.0.0
BRANCH dvt-fab10
PAGE 63 OF 145
SHEET 59 OF 121

NOTICE OF PROPRIETARY PROPERTY:
THE INFORMATION CONTAINED HEREIN IS THE PROPRIETARY PROPERTY OF APPLE INC.
THE POSESSOR AGREES TO THE FOLLOWING:
I TO MAINTAIN THIS DOCUMENT IN CONFIDENCE
II NOT TO REPRODUCE OR COPY IT
III NOT TO REVEAL OR PUBLISH IT IN WHOLE OR PART
IV ALL RIGHTS RESERVED

WWW.AliSaler.Com

2X MONO SPEAKER AMPLIFIER
APN: 353S00604
0dBFS = 9VPK

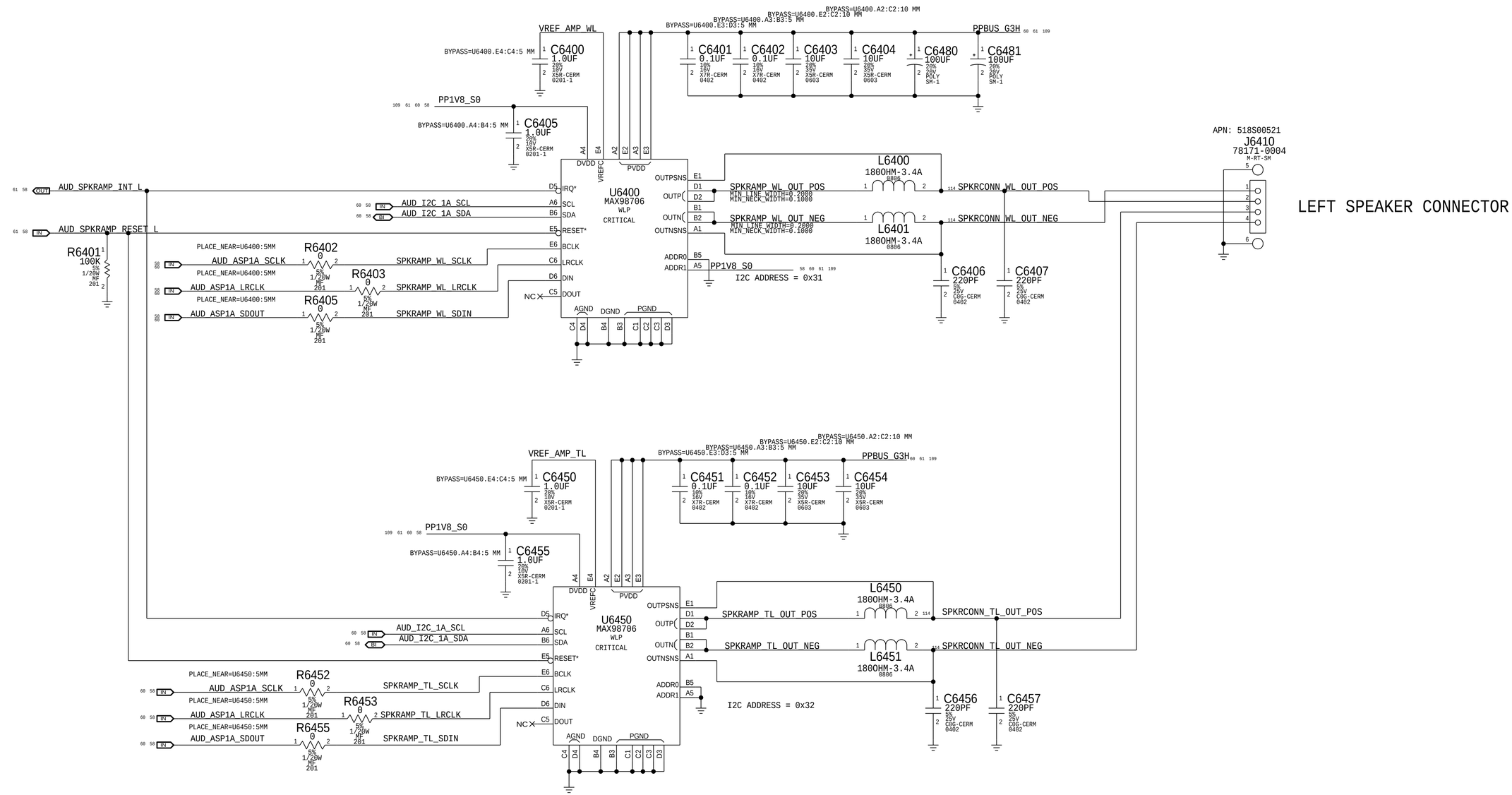

BOM_COST_GROUP=AUDIO

PAGE TITLE	AUDIO Speaker Amps & Conn
Apple Inc.	DRAWING NUMBER 051-00647 SIZE D
	REVISION 10.0.0
NOTICE OF PROPRIETARY PROPERTY: THE INFORMATION CONTAINED HEREIN IS THE PROPRIETARY PROPERTY OF APPLE INC. THE POSESSOR AGREES TO THE FOLLOWING: I TO MAINTAIN THIS DOCUMENT IN CONFIDENCE II NOT TO REPRODUCE OR COPY IT III NOT TO REVEAL OR PUBLISH IT IN WHOLE OR PART IV ALL RIGHTS RESERVED	BRANCH dvt-fab10
	PAGE 64 OF 145
	SHEET 60 OF 121

WWW.AliSaler.Com

2X MONO SPEAKER AMPLIFIER
APN: 353S00604
0dBFS = 9VPK

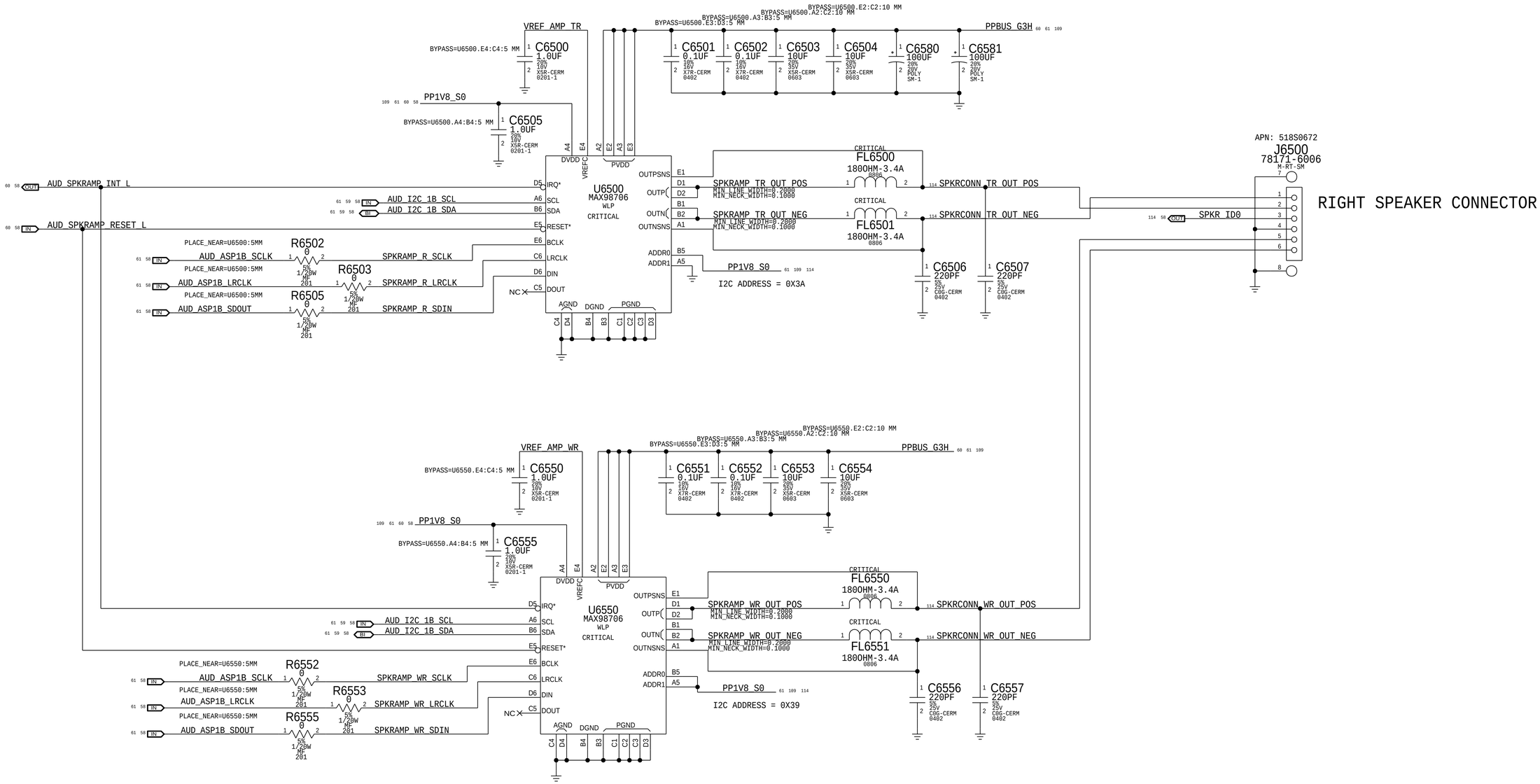

BOM_COST_GROUP=AUDIO

PAGE TITLE
AUDIO Speaker Amps & Conn

Apple Inc.

DRAWING NUMBER 051-00647
SIZE D
REVISION 10.0.0
BRANCH dvt-fab10
PAGE 65 OF 145
SHEET 61 OF 121

NOTICE OF PROPRIETARY PROPERTY:
THE INFORMATION CONTAINED HEREIN IS THE PROPRIETARY PROPERTY OF APPLE INC.
THE POSESSOR AGREES TO THE FOLLOWING:
I TO MAINTAIN THIS DOCUMENT IN CONFIDENCE
II NOT TO REPRODUCE OR COPY IT
III NOT TO REVEAL OR PUBLISH IT IN WHOLE OR PART
IV ALL RIGHTS RESERVED

WWW.AliSaler.Com

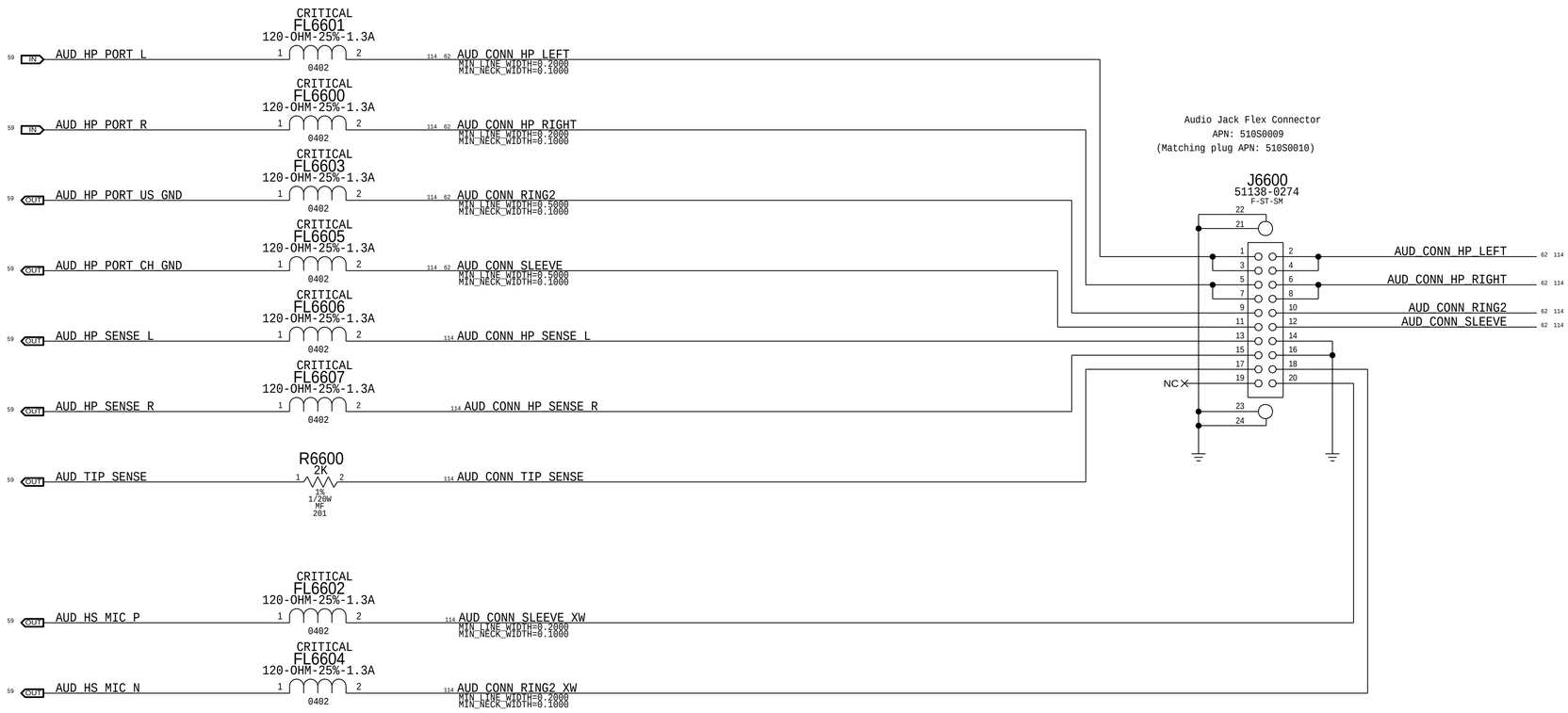

BOM_COST_GROUP=AUDIO

PAGE TITLE
AUDIO JACK CONNECTOR

Apple Inc.

DRAWING NUMBER 051-00647 SIZE D
REVISION 10.0.0
BRANCH dvt-fab10
PAGE 66 OF 145
SHEET 62 OF 121

NOTICE OF PROPRIETARY PROPERTY:
THE INFORMATION CONTAINED HEREIN IS THE PROPRIETARY PROPERTY OF APPLE INC.
THE POSESSOR AGREES TO THE FOLLOWING:
I TO MAINTAIN THIS DOCUMENT IN CONFIDENCE
II NOT TO REPRODUCE OR COPY IT
III NOT TO REVEAL OR PUBLISH IT IN WHOLE OR PART
IV ALL RIGHTS RESERVED

WWW.AliSaler.Com

J80 Battery Hotbar Flex Pads 998-03902
Flex Pad TO MLB 998-03780.

APN:518S0818

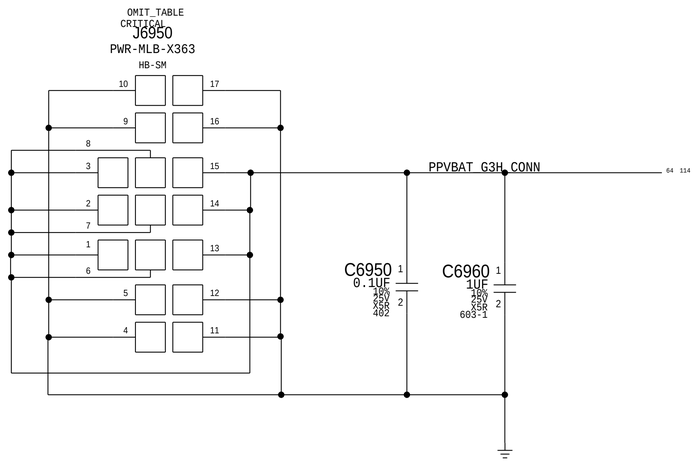

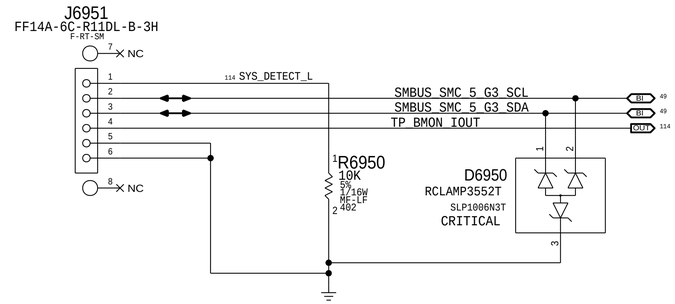

BMU POWER FLEX HOTBAR'd TO THE MLB:

PART NUMBER	QTY	DESCRIPTION	REFERENCE DES	CRITICAL	BOM OPTION
632-00862	1	PCBA,FLEX,BMU PWR,X363	J6950	CRITICAL	

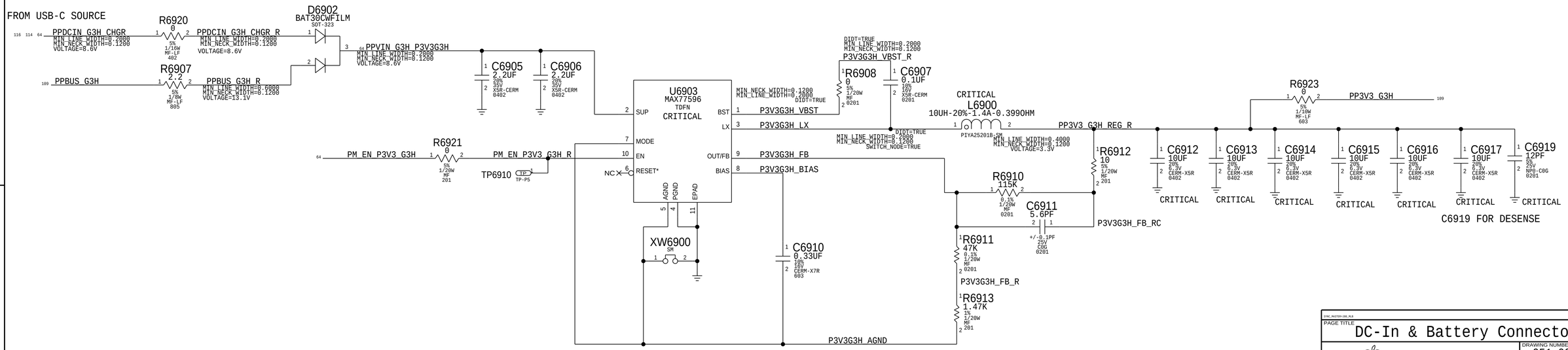

BOM_COST_GROUP=PLATFORM POWER

PAGE TITLE
DC-In & Battery Connectors

Apple Inc.

DRAWING NUMBER 051-00647 SIZE D
REVISION 10.0.0
BRANCH dvt-fab10
PAGE 69 OF 145
SHEET 63 OF 121

NOTICE OF PROPRIETARY PROPERTY:
THE INFORMATION CONTAINED HEREIN IS THE PROPRIETARY PROPERTY OF APPLE INC.
THE POSESSOR AGREES TO THE FOLLOWING:
I TO MAINTAIN THIS DOCUMENT IN CONFIDENCE
II NOT TO REPRODUCE OR COPY IT
III NOT TO REVEAL OR PUBLISH IT IN WHOLE OR PART
IV ALL RIGHTS RESERVED

WWW.AliSaler.Com

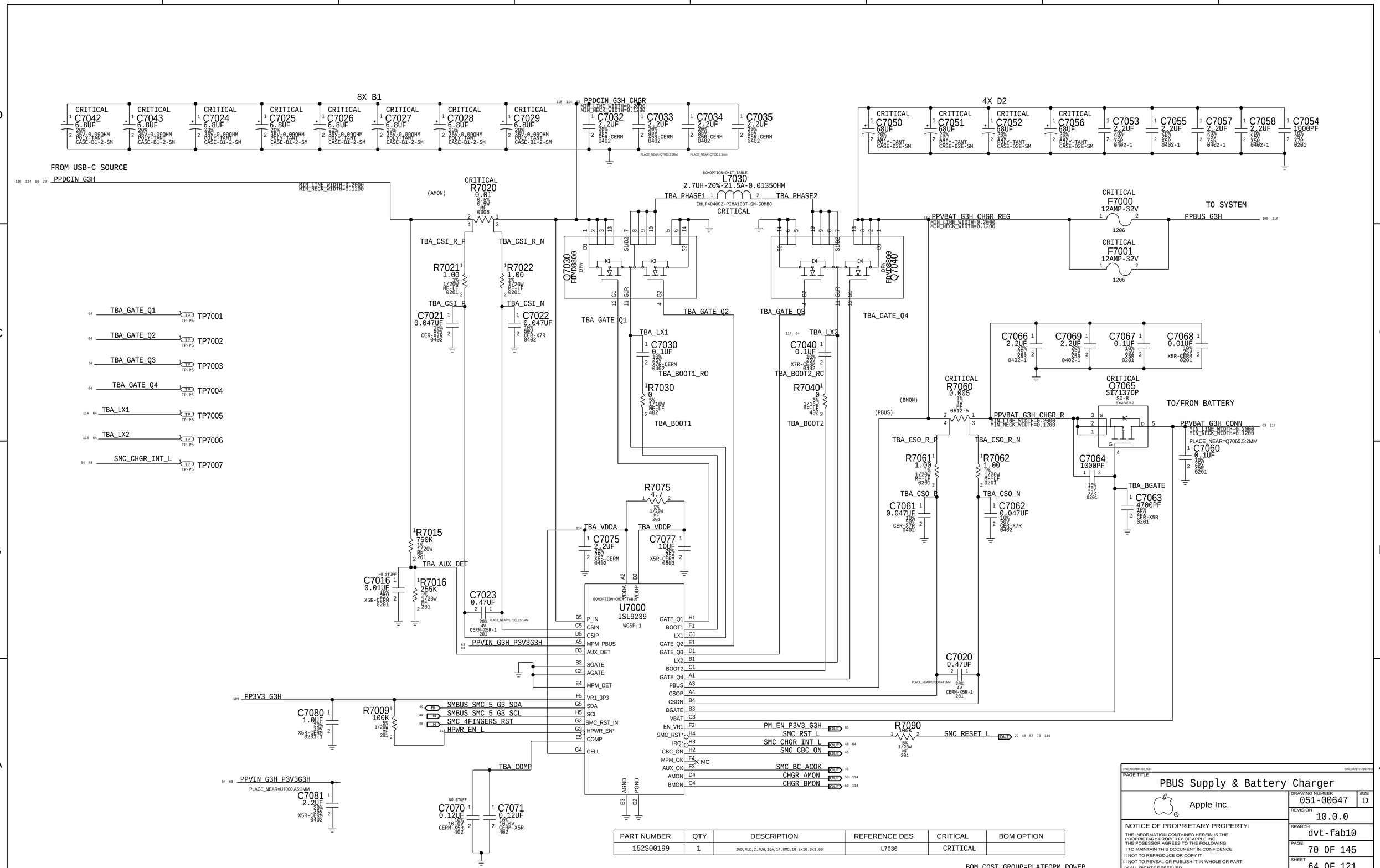

PART NUMBER	QTY	DESCRIPTION	REFERENCE DES	CRITICAL	BOM OPTION
152S00199	1	IND,MLD,2.7UH,16A,14.8MΩ,10.9x10.0x3.00	L7030	CRITICAL	

BOM_COST_GROUP=PLATFORM POWER

PAGE TITLE
PBUS Supply & Battery Charger

Apple Inc.

DRAWING NUMBER 051-00647
SIZE D
REVISION 10.0.0
BRANCH dvt-fab10
PAGE 70 OF 145
SHEET 64 OF 121

NOTICE OF PROPRIETARY PROPERTY:
THE INFORMATION CONTAINED HEREIN IS THE PROPRIETARY PROPERTY OF APPLE INC.
THE POSSESSOR AGREES TO THE FOLLOWING:
I TO MAINTAIN THIS DOCUMENT IN CONFIDENCE
II NOT TO REPRODUCE OR COPY IT
III NOT TO REVEAL OR PUBLISH IT IN WHOLE OR PART
IV ALL RIGHTS RESERVED

WWW.AliSaler.Com

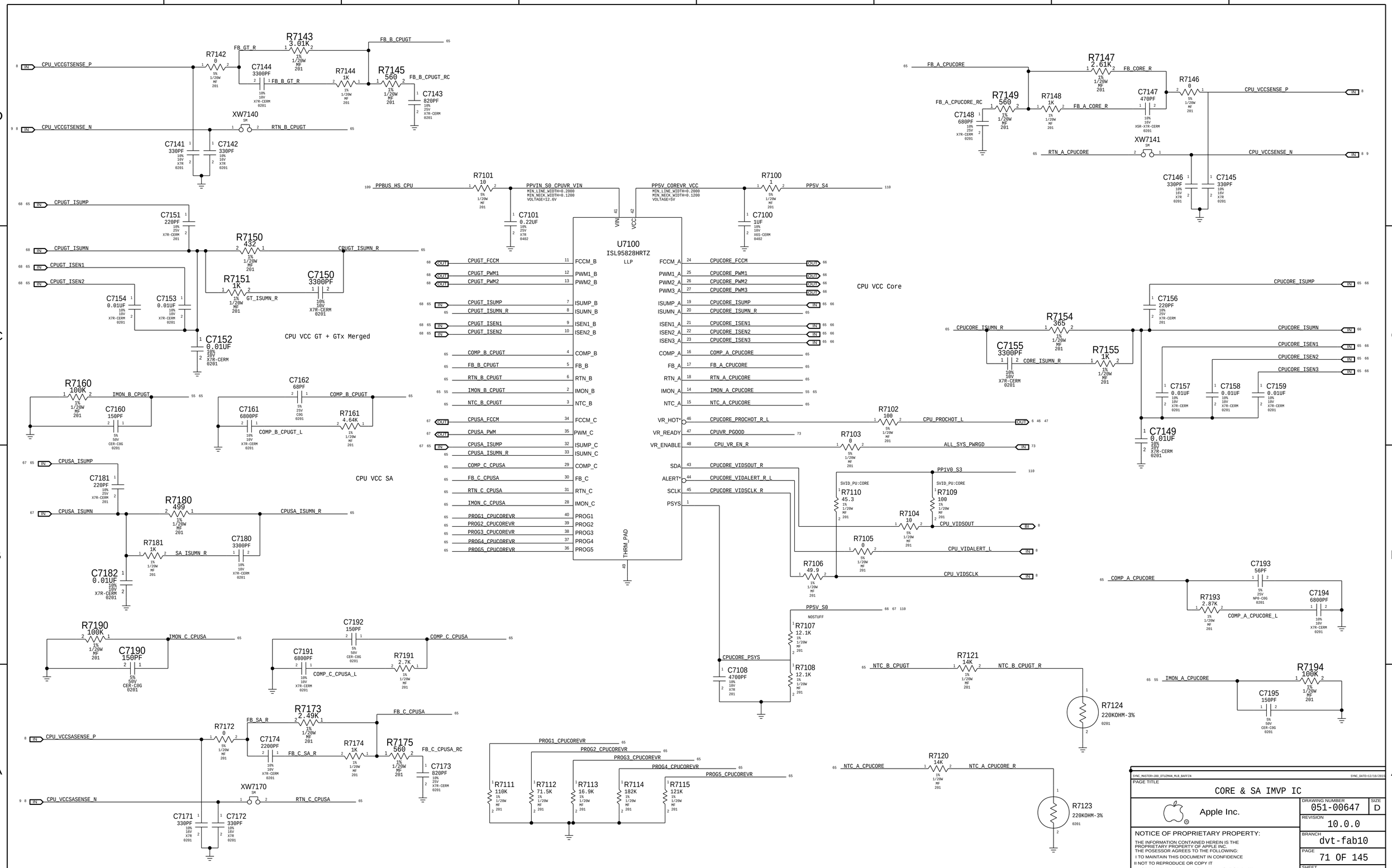

WWW.AliSaler.Com

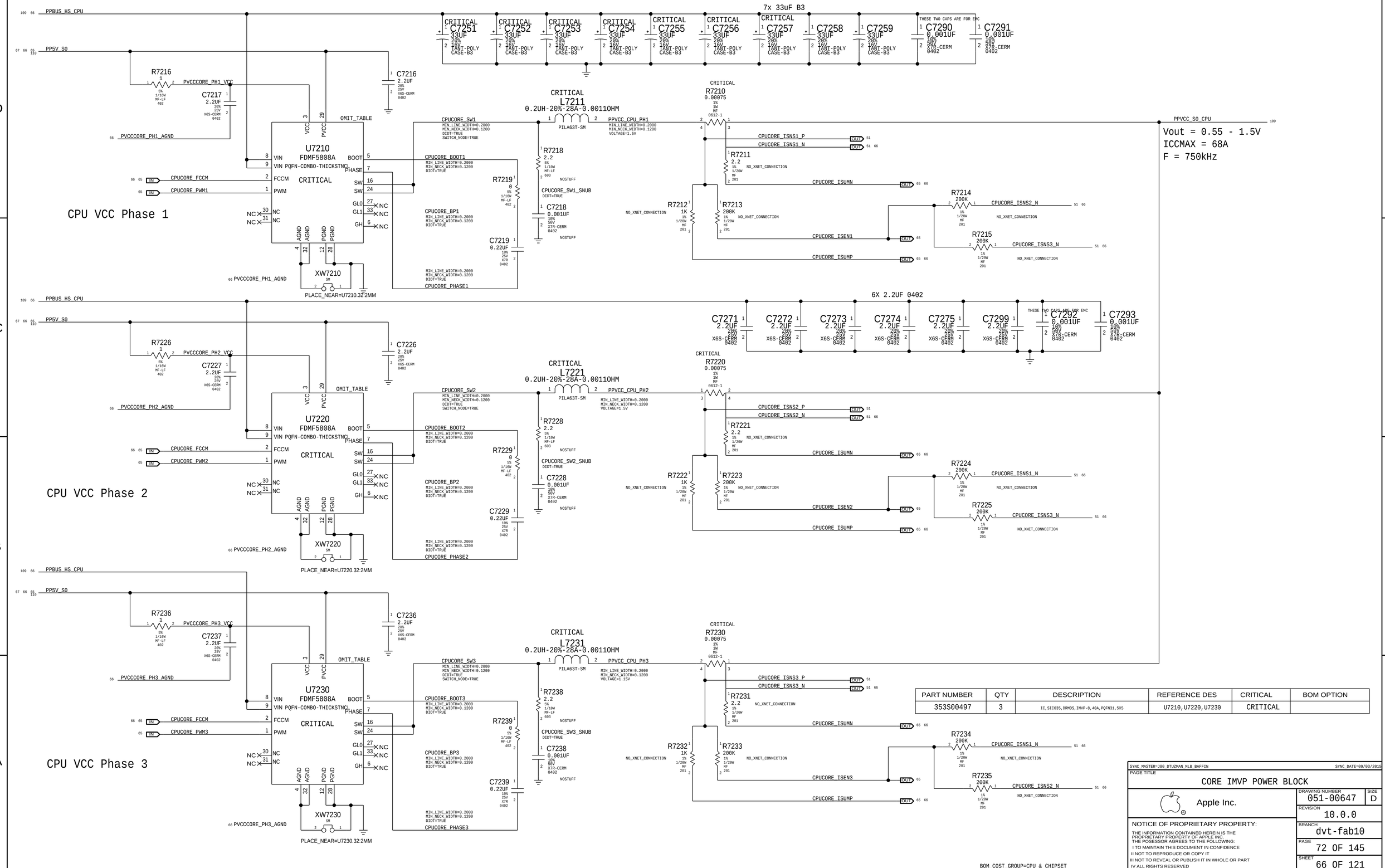

PART NUMBER	QTY	DESCRIPTION	REFERENCE DES	CRITICAL	BOM OPTION
353S00497	3	IC,SIC635,DRMOS,IMVP-8,40A,PQFN31,5X5	U7210,U7220,U7230	CRITICAL	

SYNC_MASTER=J89_DTUZMAN_MLB_BAFFIN SYNC_DATE=09/03/2015

PAGE TITLE: CORE IMVP POWER BLOCK

Apple Inc.

DRAWING NUMBER: 051-00647 SIZE: D

REVISION: 10.0.0

BRANCH: dvt-fab10

PAGE: 72 OF 145

SHEET: 66 OF 121

NOTICE OF PROPRIETARY PROPERTY:
THE INFORMATION CONTAINED HEREIN IS THE PROPRIETARY PROPERTY OF APPLE INC.
THE POSESSOR AGREES TO THE FOLLOWING:
I TO MAINTAIN THIS DOCUMENT IN CONFIDENCE
II NOT TO REPRODUCE OR COPY IT
III NOT TO REVEAL OR PUBLISH IT IN WHOLE OR PART
IV ALL RIGHTS RESERVED

WWW.AliSaler.Com

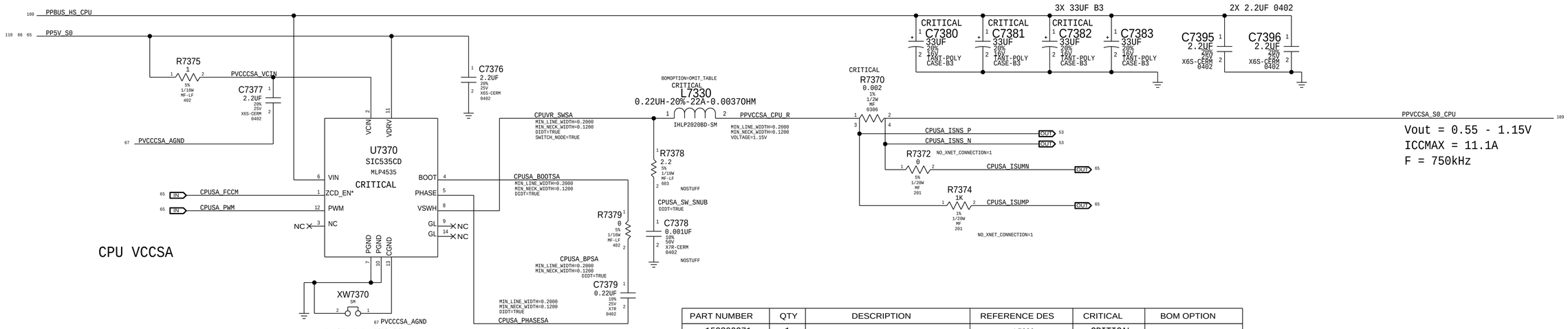

PART NUMBER	QTY	DESCRIPTION	REFERENCE DES	CRITICAL	BOM OPTION
152S00371	1	IND,MLD,0.22UH,20%,22A,3.7MO,5.1x5.2x2.4	L7330	CRITICAL	

BOM_COST_GROUP=CPU & CHIPSET

SYNC_MASTER=J80_DTUZMAN_MLB_BAFFIN SYNC_DATE=11/18/2015

PAGE TITLE

SA IMVP IC

Apple Inc.

DRAWING NUMBER 051-00647 SIZE D

REVISION 10.0.0

BRANCH dvt-fab10

PAGE 73 OF 145

SHEET 67 OF 121

NOTICE OF PROPRIETARY PROPERTY:
THE INFORMATION CONTAINED HEREIN IS THE PROPRIETARY PROPERTY OF APPLE INC.
THE POSESSOR AGREES TO THE FOLLOWING:
I TO MAINTAIN THIS DOCUMENT IN CONFIDENCE
II NOT TO REPRODUCE OR COPY IT
III NOT TO REVEAL OR PUBLISH IT IN WHOLE OR PART
IV ALL RIGHTS RESERVED

WWW.AliSaler.Com

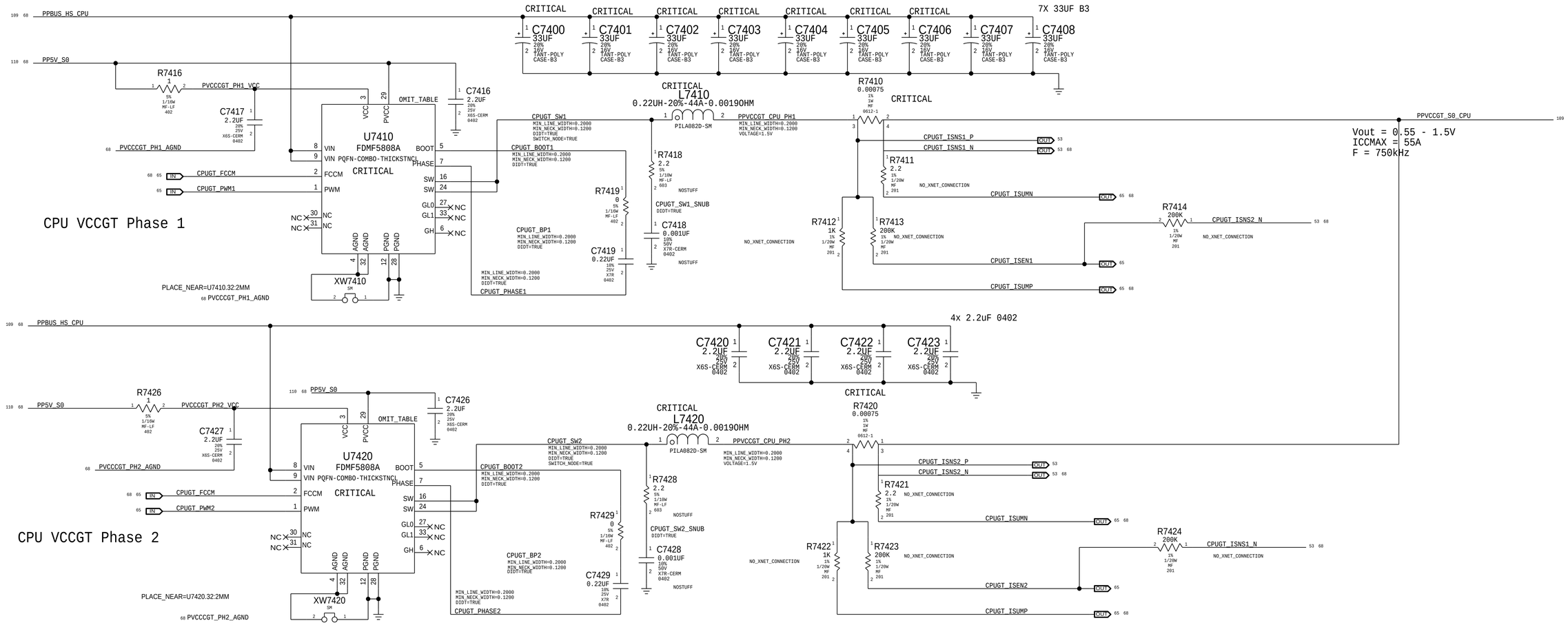

PART NUMBER	QTY	DESCRIPTION	REFERENCE DES	CRITICAL	BOM OPTION
353S00497	2	IC,SIC635,DRMOS,IMVP-8,40A,PQFN31,5X5	U7410,U7420	CRITICAL	

BOM_COST_GROUP=CPU & CHIPSET

SYNC_MASTER=J80_DTSUZMAN_MLB_BAFFIN SYNC_DATE=09/03/2013

PAGE TITLE
GT & GTX IMVP POWER BLOCK

Apple Inc.

DRAWING NUMBER 051-00647 SIZE D
REVISION 10.0.0
BRANCH dvt-fab10
PAGE 74 OF 145
SHEET 68 OF 121

NOTICE OF PROPRIETARY PROPERTY:
THE INFORMATION CONTAINED HEREIN IS THE PROPRIETARY PROPERTY OF APPLE INC.
THE POSESSOR AGREES TO THE FOLLOWING:
I TO MAINTAIN THIS DOCUMENT IN CONFIDENCE
II NOT TO REPRODUCE OR COPY IT
III NOT TO REVEAL OR PUBLISH IT IN WHOLE OR PART
IV ALL RIGHTS RESERVED

WWW.AliSaler.Com

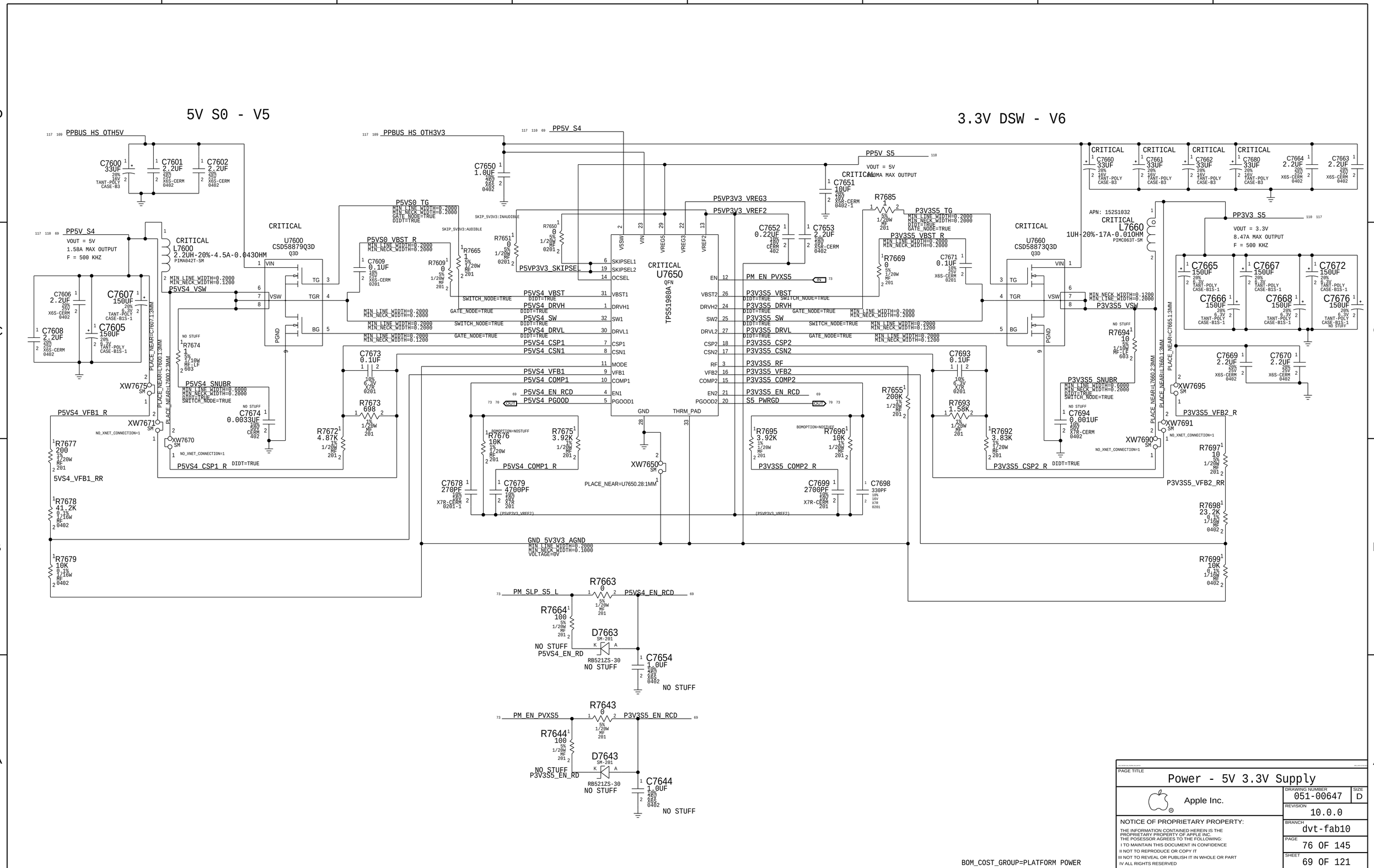

PAGE TITLE

Power - 5V 3.3V Supply

Apple Inc.

DRAWING NUMBER 051-00647

SIZE D

REVISION 10.0.0

BRANCH dvt-fab10

PAGE 76 OF 145

SHEET 69 OF 121

NOTICE OF PROPRIETARY PROPERTY:

THE INFORMATION CONTAINED HEREIN IS THE PROPRIETARY PROPERTY OF APPLE INC.
THE POSESSOR AGREES TO THE FOLLOWING:
I TO MAINTAIN THIS DOCUMENT IN CONFIDENCE
II NOT TO REPRODUCE OR COPY IT
III NOT TO REVEAL OR PUBLISH IT IN WHOLE OR PART
IV ALL RIGHTS RESERVED

WWW.AliSaler.Com

BANJO - PMIC Control

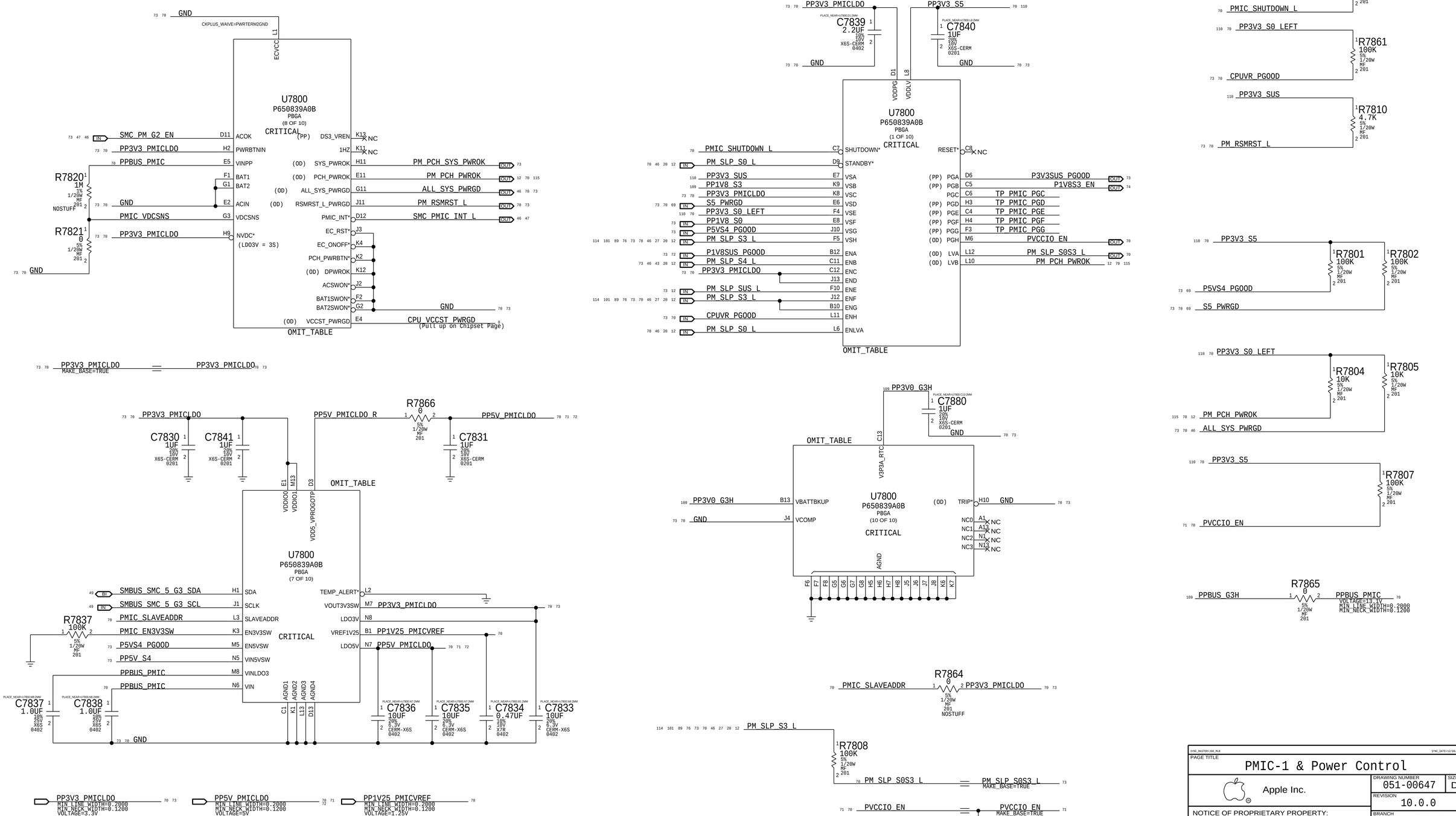

PAGE TITLE

PMIC-1 & Power Control

Apple Inc.

DRAWING NUMBER 051-00647 | SIZE D

REVISION 10.0.0

BRANCH dvt-fab10

PAGE 78 OF 145

SHEET 70 OF 121

NOTICE OF PROPRIETARY PROPERTY:
THE INFORMATION CONTAINED HEREIN IS THE PROPRIETARY PROPERTY OF APPLE INC.
THE POSESSOR AGREES TO THE FOLLOWING:
I TO MAINTAIN THIS DOCUMENT IN CONFIDENCE
II NOT TO REPRODUCE OR COPY IT
III NOT TO REVEAL OR PUBLISH IT IN WHOLE OR PART
IV ALL RIGHTS RESERVED

WWW.AliSaler.Com

1.2V VDDQ - V10 (Banjo#1 VR4)

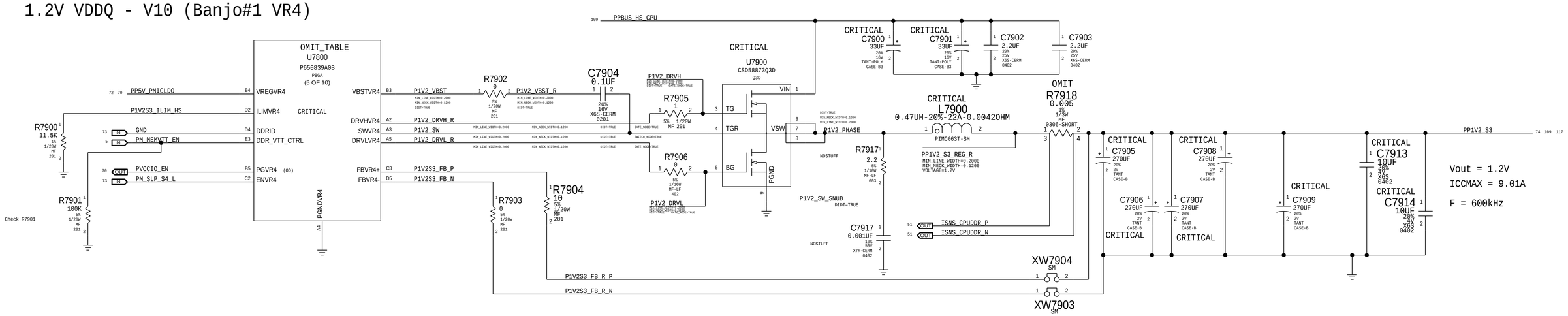

0.6V VTT - V13 (Banjo#1 LDO01)

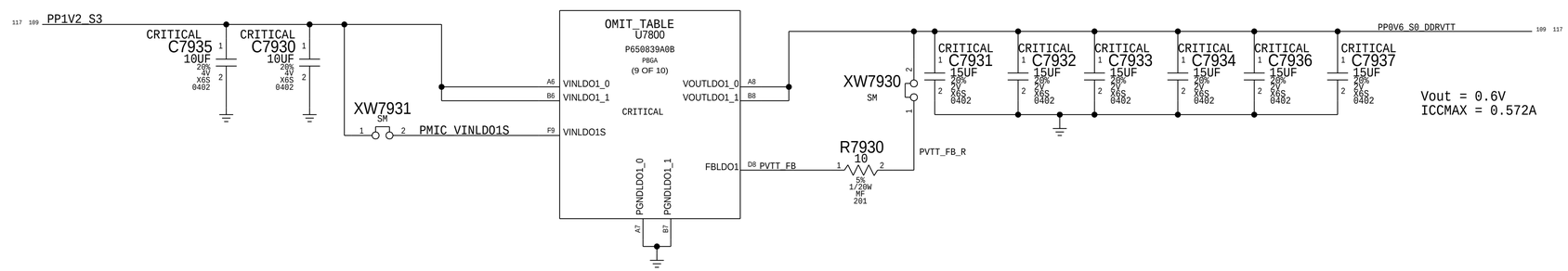

0.95V VCCIO - V6 (Banjo#1 VR3)

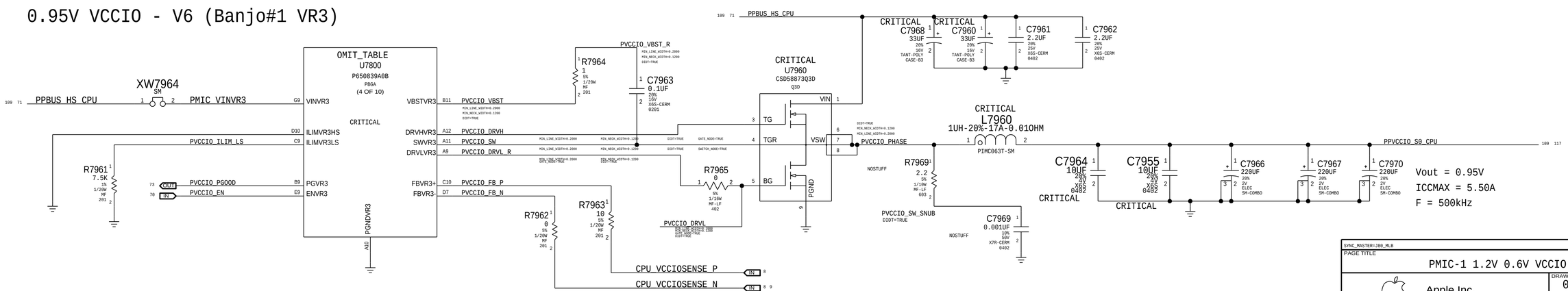

SYNC_MASTER=J80_MLB SYNC_DATE=11/06/2015

PAGE TITLE

PMIC-1 1.2V 0.6V VCCIO

Apple Inc.

DRAWING NUMBER 051-00647 SIZE D

REVISION 10.0.0

BRANCH dvt-fab10

PAGE 79 OF 145

SHEET 71 OF 121

NOTICE OF PROPRIETARY PROPERTY:

THE INFORMATION CONTAINED HEREIN IS THE PROPRIETARY PROPERTY OF APPLE INC.
THE POSESSOR AGREES TO THE FOLLOWING:
I TO MAINTAIN THIS DOCUMENT IN CONFIDENCE
II NOT TO REPRODUCE OR COPY IT
III NOT TO REVEAL OR PUBLISH IT IN WHOLE OR PART
IV ALL RIGHTS RESERVED

BOM_COST_GROUP=PLATFORM POWER

WWW.AliSaler.Com

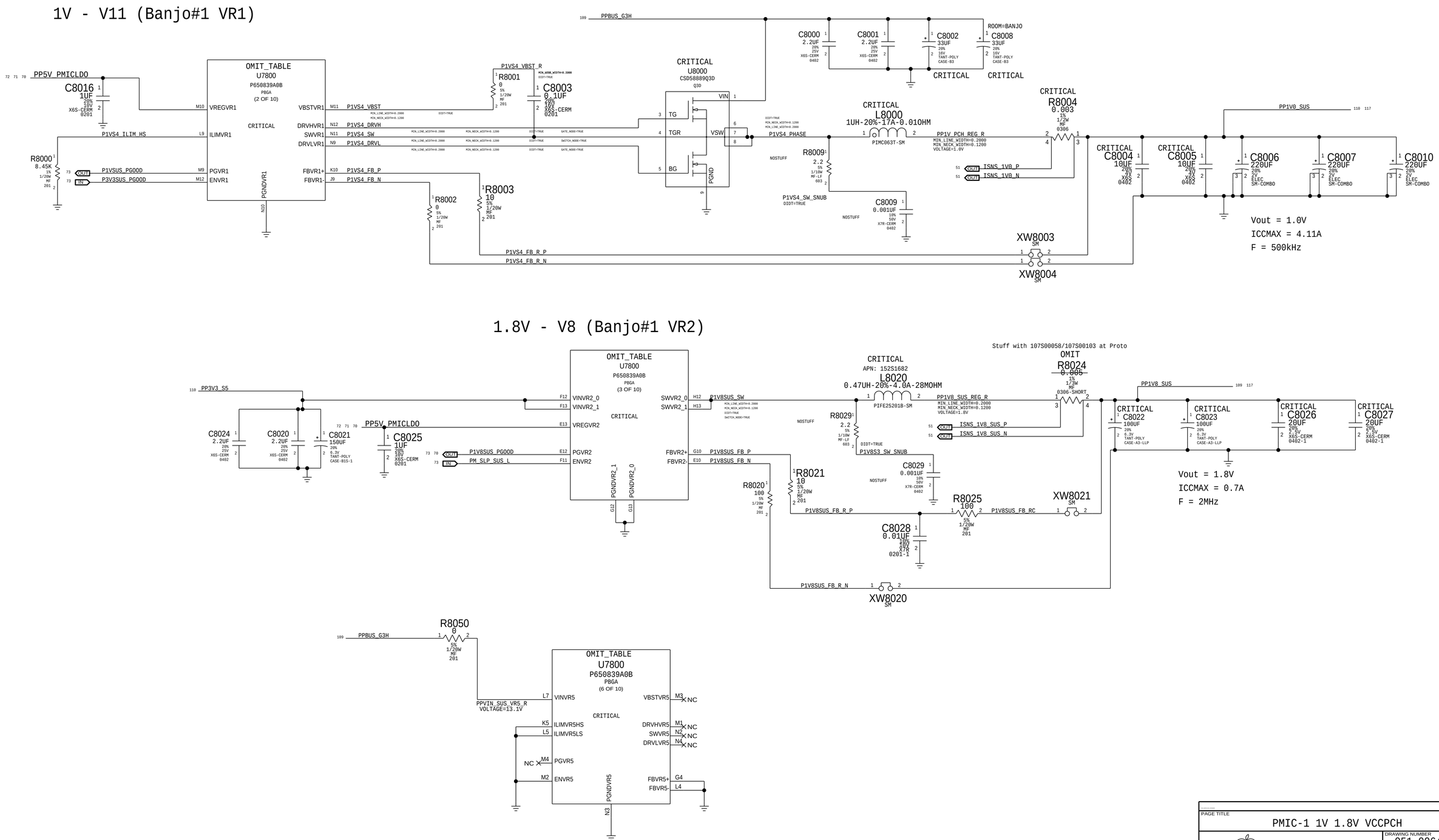

PAGE TITLE
PMIC-1 1V 1.8V VCCPCH

Apple Inc.

DRAWING NUMBER 051-00647
SIZE D
REVISION 10.0.0
BRANCH dvt-fab10
PAGE 80 OF 145
SHEET 72 OF 121

NOTICE OF PROPRIETARY PROPERTY:
THE INFORMATION CONTAINED HEREIN IS THE PROPRIETARY PROPERTY OF APPLE INC.
THE POSESSOR AGREES TO THE FOLLOWING:
I TO MAINTAIN THIS DOCUMENT IN CONFIDENCE
II NOT TO REPRODUCE OR COPY IT
III NOT TO REVEAL OR PUBLISH IT IN WHOLE OR PART
IV ALL RIGHTS RESERVED

WWW.AliSaler.Com

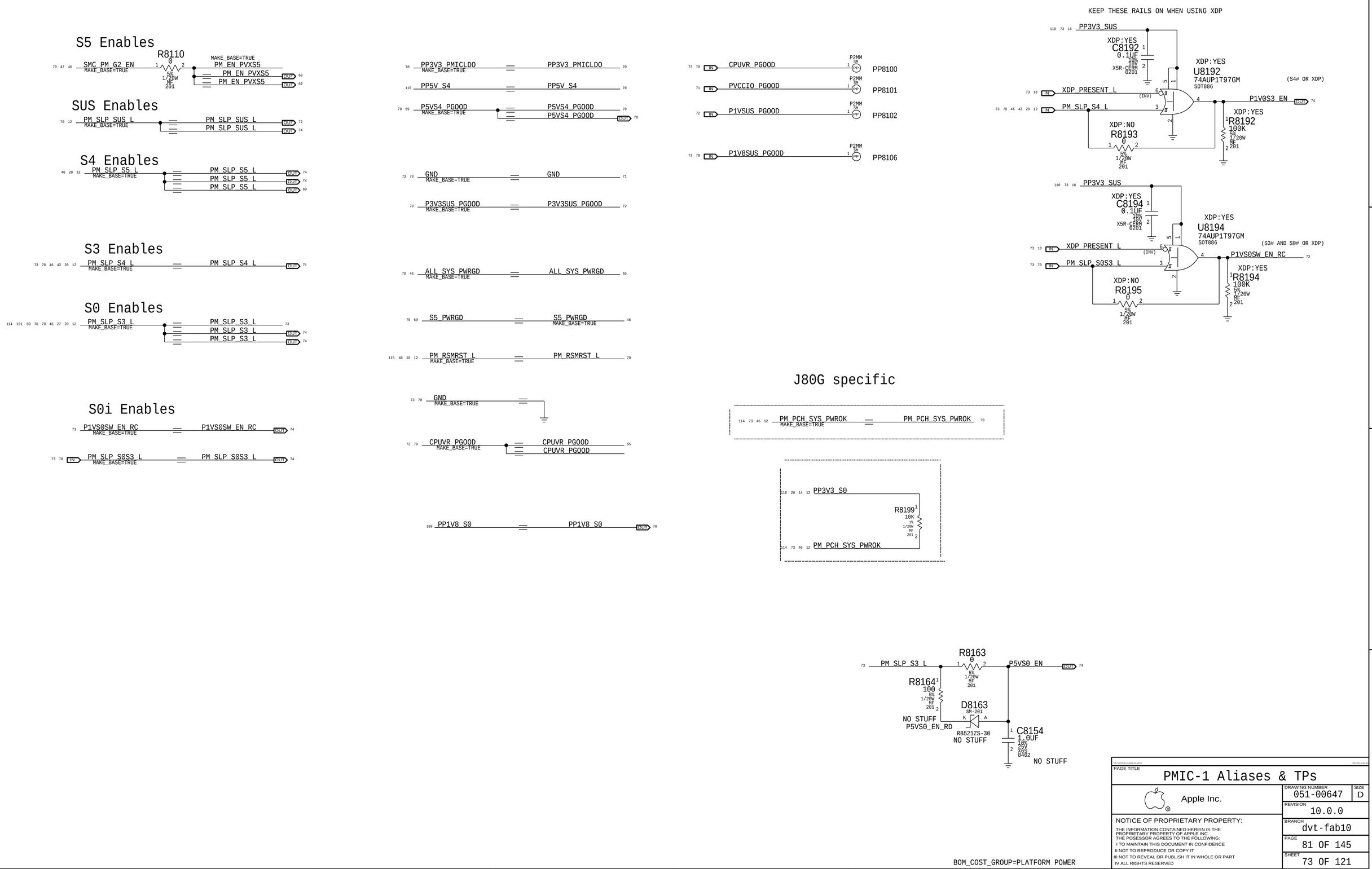

WWW.AliSaler.Com

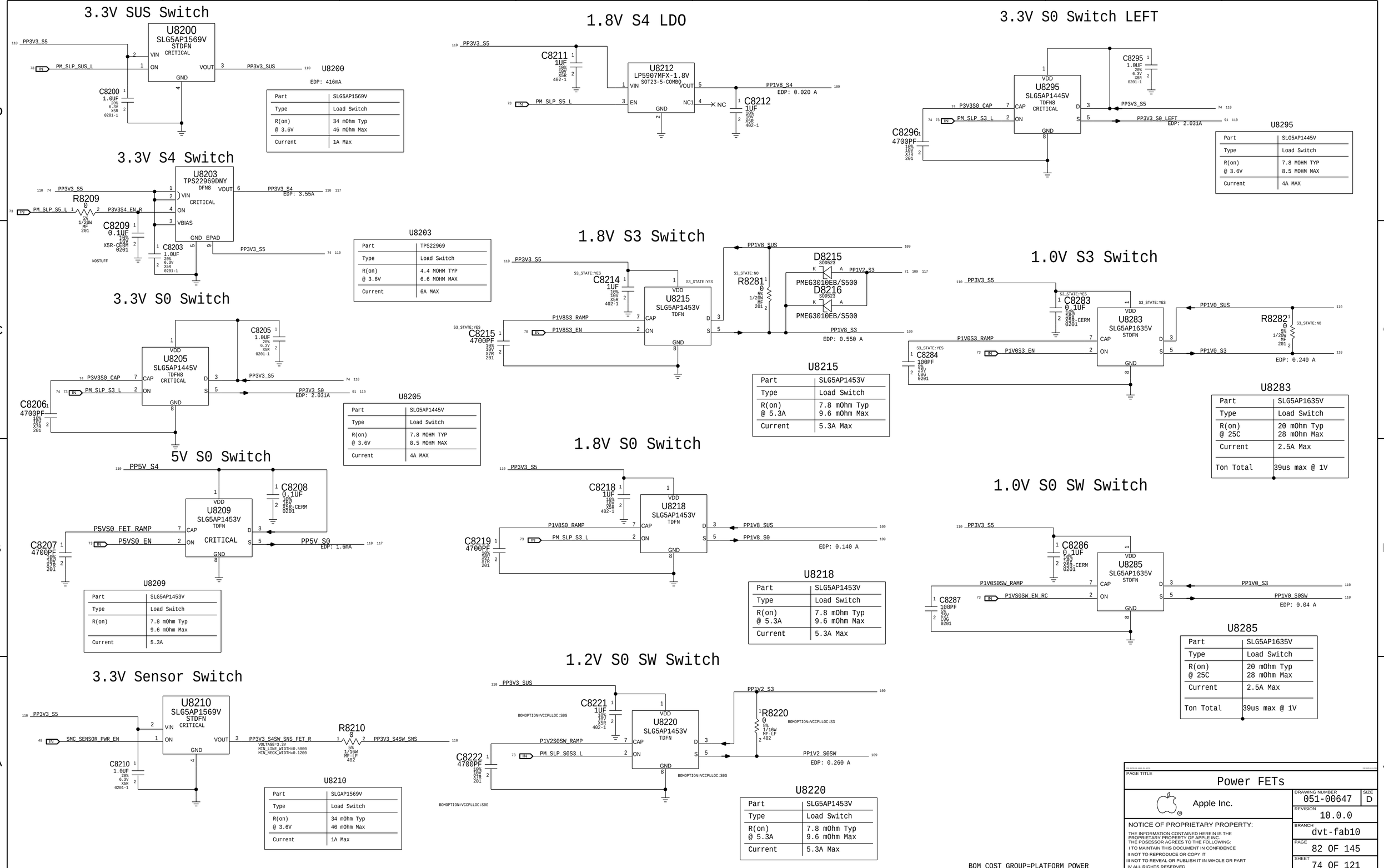

WWW.AliSaler.Com

Page Notes

Power aliases required by this page:

- =PPVIN_S0SW_LCDBKLTFET (9-12.6V LCD BACKLIGHT INPUT)
- =PP5V_S0_BKLT (5V BACKLIGHT DRIVER INPUT)

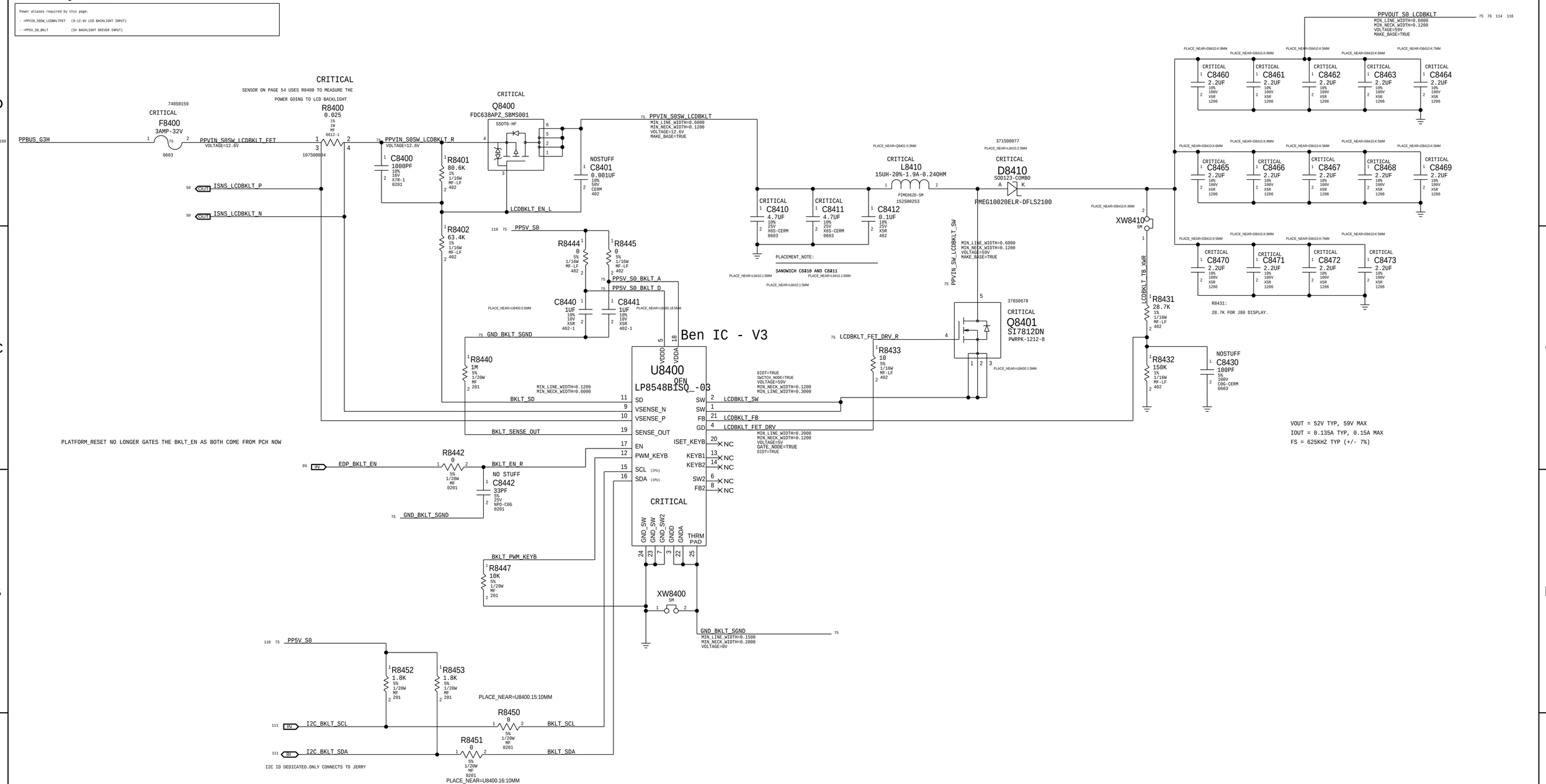

PAGE TITLE: LCD Backlight Driver

Apple Inc.

DRAWING NUMBER: 051-00647 | SIZE: D

REVISION: 10.0.0

BRANCH: dvt-fab10

PAGE: 84 OF 145

SHEET: 75 OF 121

NOTICE OF PROPRIETARY PROPERTY:
THE INFORMATION CONTAINED HEREIN IS THE PROPRIETARY PROPERTY OF APPLE INC.
THE POSESSOR AGREES TO THE FOLLOWING:
I TO MAINTAIN THIS DOCUMENT IN CONFIDENCE
II NOT TO REPRODUCE OR COPY IT
III NOT TO REVEAL OR PUBLISH IT IN WHOLE OR PART
IV ALL RIGHTS RESERVED

WWW.AliSaler.Com

LCD PANEL INTERFACE (eDP) + Camera (MIPI)

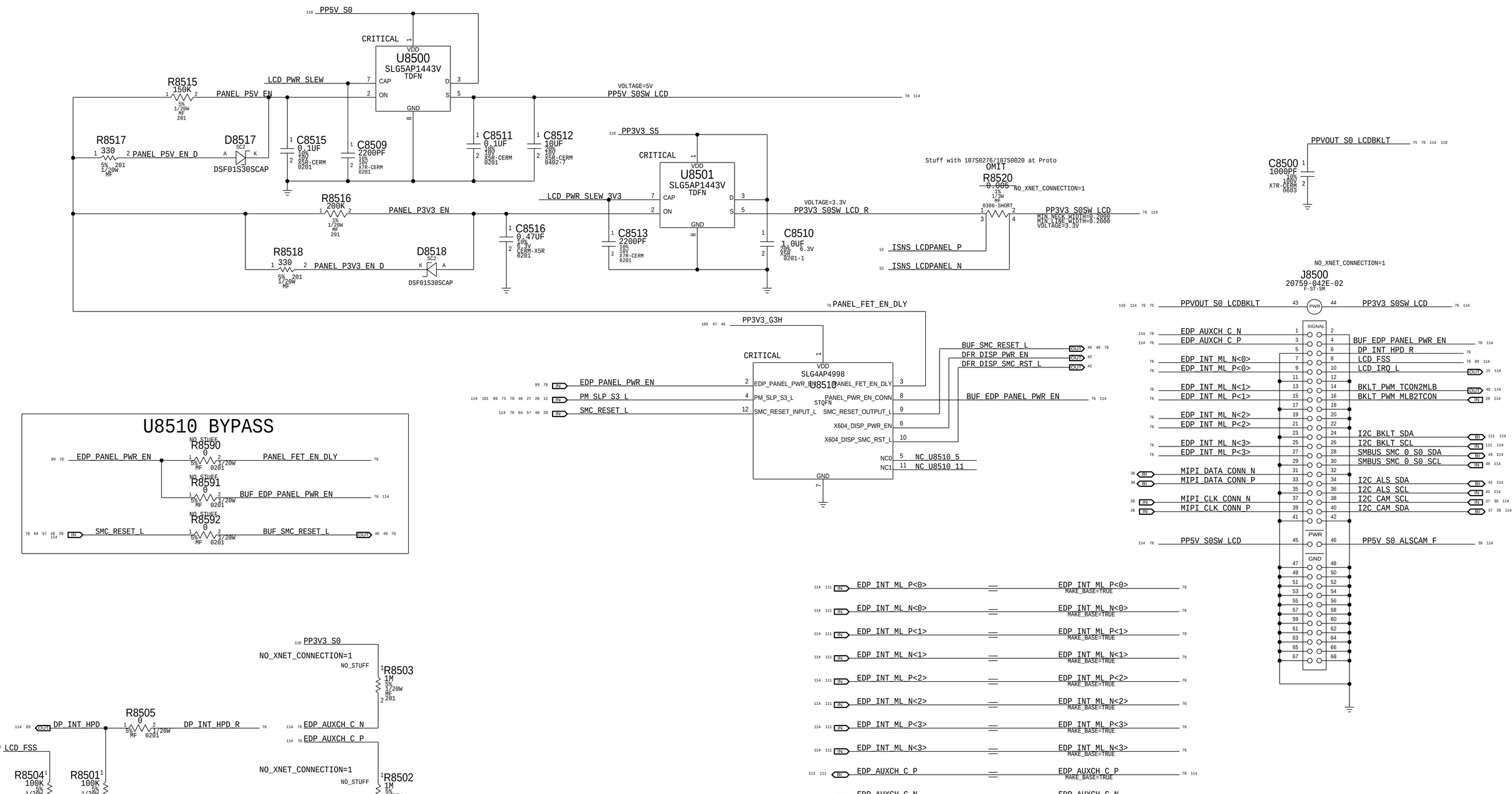

LCD Panel HPD, FSS & AUX strapping

PAGE TITLE
eDP Display Connector

Apple Inc.

DRAWING NUMBER 051-00647 SIZE D
REVISION 10.0.0
BRANCH dvt-fab10
PAGE 85 OF 145
SHEET 76 OF 121

NOTICE OF PROPRIETARY PROPERTY:
THE INFORMATION CONTAINED HEREIN IS THE PROPRIETARY PROPERTY OF APPLE INC.
THE POSESSOR AGREES TO THE FOLLOWING:
I TO MAINTAIN THIS DOCUMENT IN CONFIDENCE
II NOT TO REPRODUCE OR COPY IT
III NOT TO REVEAL OR PUBLISH IT IN WHOLE OR PART
IV ALL RIGHTS RESERVED

WWW.AliSaler.Com

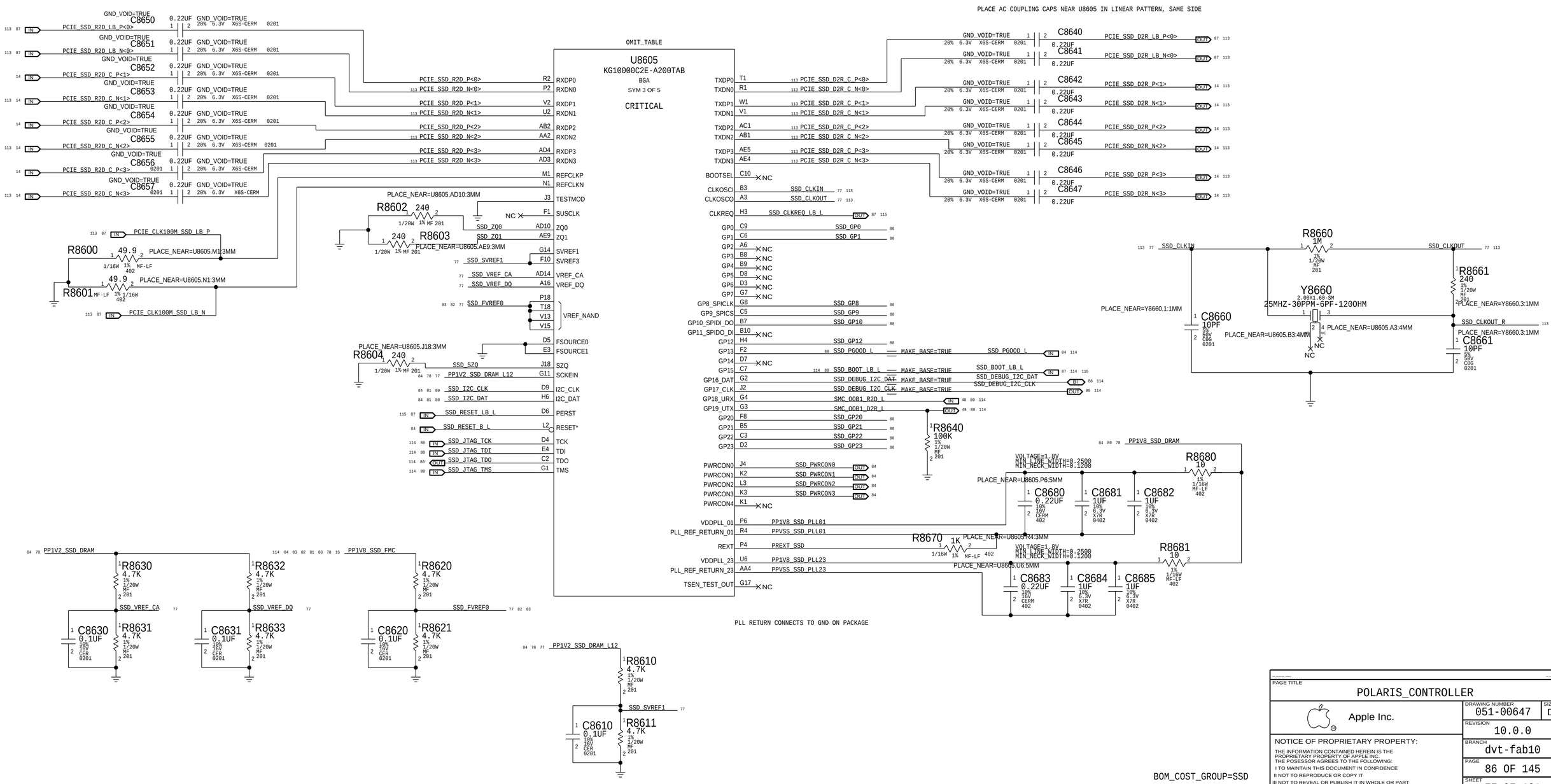

WWW.AliSaler.Com

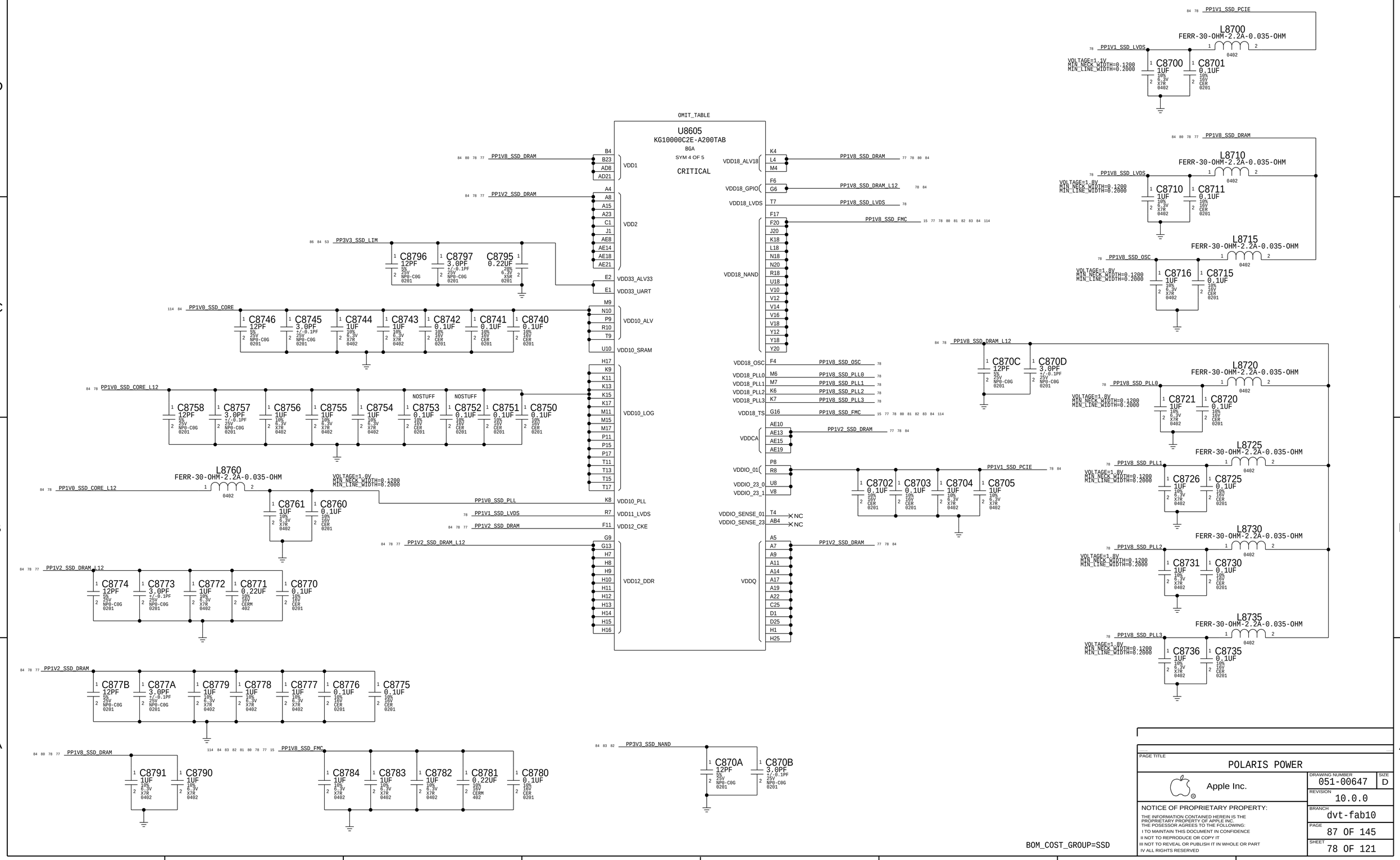

PAGE TITLE
POLARIS POWER

Apple Inc.

DRAWING NUMBER 051-00647 SIZE D
REVISION 10.0.0
BRANCH dvt-fab10
PAGE 87 OF 145
SHEET 78 OF 121

NOTICE OF PROPRIETARY PROPERTY:
THE INFORMATION CONTAINED HEREIN IS THE PROPRIETARY PROPERTY OF APPLE INC.
THE POSESSOR AGREES TO THE FOLLOWING:
I TO MAINTAIN THIS DOCUMENT IN CONFIDENCE
II NOT TO REPRODUCE OR COPY IT
III NOT TO REVEAL OR PUBLISH IT IN WHOLE OR PART
IV ALL RIGHTS RESERVED

WWW.AliSaler.Com

OMIT_TABLE

U8605
KG10000C2E-A200TAB
BGA
SYM 5 OF 5

CRITICAL

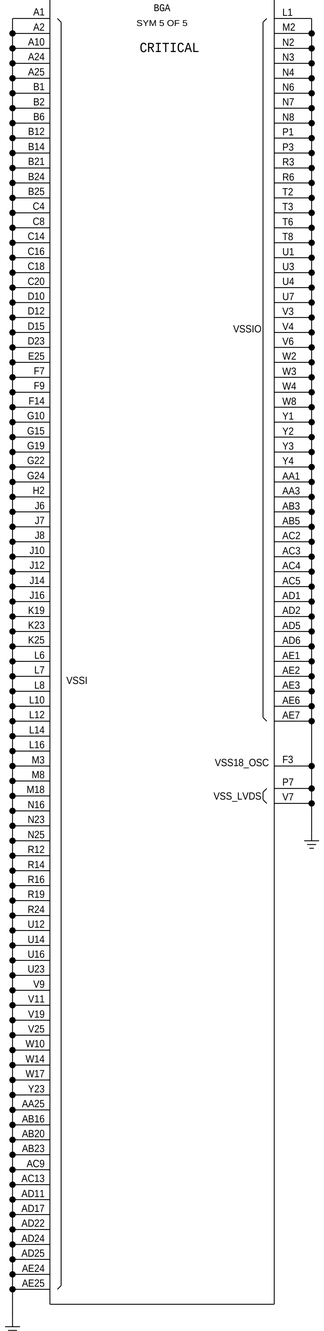

BOM_COST_GROUP=SSD

PAGE TITLE
PAGE_TITLE=POLARIS GND

Apple Inc.

DRAWING NUMBER	051-00647
SIZE	D
REVISION	10.0.0
BRANCH	dvt-fab10
PAGE	88 OF 145
SHEET	79 OF 121

NOTICE OF PROPRIETARY PROPERTY:
THE INFORMATION CONTAINED HEREIN IS THE PROPRIETARY PROPERTY OF APPLE INC.
THE POSESSOR AGREES TO THE FOLLOWING:
I TO MAINTAIN THIS DOCUMENT IN CONFIDENCE
II NOT TO REPRODUCE OR COPY IT
III NOT TO REVEAL OR PUBLISH IT IN WHOLE OR PART
IV ALL RIGHTS RESERVED

WWW.AliSaler.Com

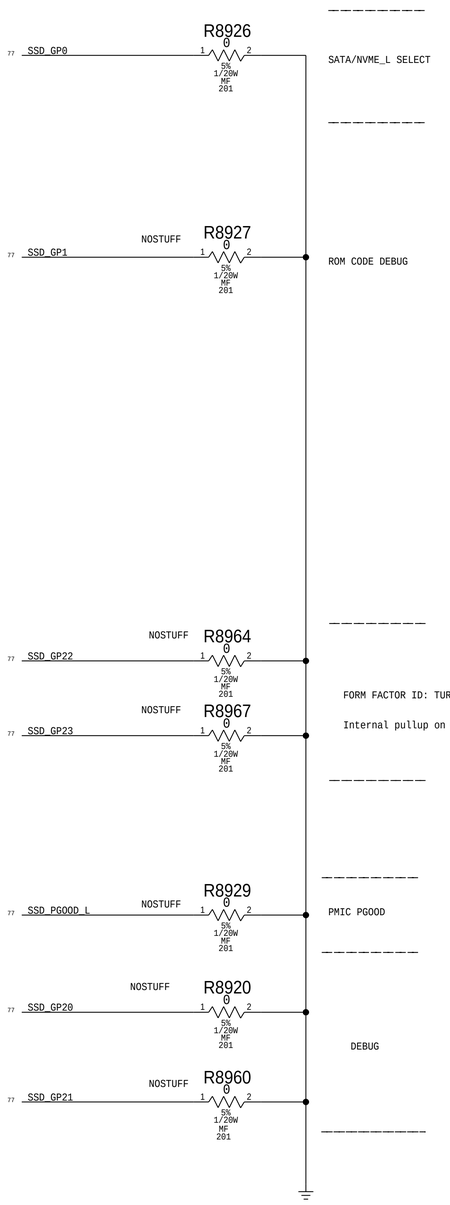

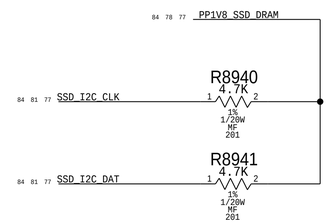

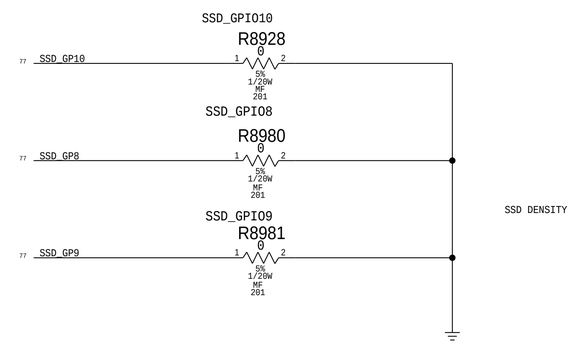

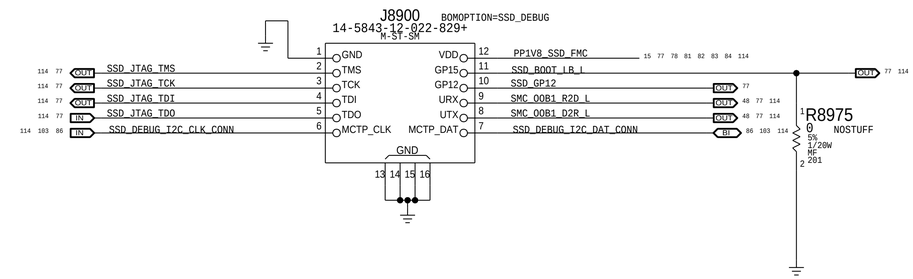

SSD RELATED BOM Groups

BOM GROUP	BOM OPTIONS
SSD_CONFIG:256GB	SSD_GPIO9,NAND_TYPE:256GB,SSD_CTRL_TYPE:4GBIT
SSD_CONFIG:512GB	SSD_GPIO8,NAND_TYPE:512GB,SSD_CTRL_TYPE:4GBIT
SSD_CONFIG:1TB	NAND_TYPE:1TB,SSD_CTRL_TYPE:8GBIT
SSD_CONFIG:2TB	SSD_GPIO10,NAND_TYPE:2TB,SSD_CTRL_TYPE:8GBIT

NAND Parts

PART NUMBER	QTY	DESCRIPTION	REFERENCE DES	CRITICAL	BOM OPTION
335S00149	4	NAND,1Z,64GBM,TOGG DDR2,64G,SS,BGA 168	U9100,U9110,U9200,U9210	CRITICAL	NAND_TYPE:256GB
335S00204	4	NAND,V3,128GBM,TOGG DDR2,256G,SSBGA 168	U9100,U9110,U9200,U9210	CRITICAL	NAND_TYPE:512GB
335S00205	4	NAND,V3,256GBM,TOGG DDR2,256G,SS,BGA 168	U9100,U9110,U9200,U9210	CRITICAL	NAND_TYPE:1TB
335S00219	4	NAND,V3,512GBM,TOGG DDR2,256G,SS,BGA 168	U9100,U9110,U9200,U9210	CRITICAL	NAND_TYPE:2TB

SSD Controller Parts

PART NUMBER	QTY	DESCRIPTION	REFERENCE DES	CRITICAL	BOM OPTION
339S00154	1	POP,POLARIS+4GBIT,SSD CTRL,A2,BGA516	U8605	CRITICAL	SSD_CTRL_TYPE:4GBIT
339S00155	1	POP,POLARIS+8GBIT,SSD CTRL,A2,BGA516	U8605	CRITICAL	SSD_CTRL_TYPE:8GBIT

SSD CONFIGURATIONS

CAPACITY	NAND APN	CONTROLLER APN	R8980/GPIO8	R8981/GPIO9	R8928/GPIO10
128 GB	-	-	STUFF-0	STUFF-0	STUFF-0
256 GB	335S00149	339S00154 (A2 4GB DRAM)	NOSTUFF-1	STUFF-0	NOSTUFF-1
512 GB	335S00204	339S00154 (A2 4GB DRAM)	STUFF-0	NOSTUFF-1	NOSTUFF-1
1 TB	335S00205	339S00155 (A2 8GB DRAM)	NOSTUFF-1	NOSTUFF-1	NOSTUFF-1
2 TB	335S00219	339S00155 (A2 8GB DRAM)	NOSTUFF-1	NOSTUFF-1	STUFF-0

BOM_COST_GROUP=SSD

PAGE TITLE
Connector

Apple Inc.

DRAWING NUMBER 051-00647 SIZE D
REVISION 10.0.0
BRANCH dvt-fab10
PAGE 89 OF 145
SHEET 80 OF 121

NOTICE OF PROPRIETARY PROPERTY:
THE INFORMATION CONTAINED HEREIN IS THE PROPRIETARY PROPERTY OF APPLE INC.
THE POSESSOR AGREES TO THE FOLLOWING:
I TO MAINTAIN THIS DOCUMENT IN CONFIDENCE
II NOT TO REPRODUCE OR COPY IT
III NOT TO REVEAL OR PUBLISH IT IN WHOLE OR PART
IV ALL RIGHTS RESERVED

WWW.AliSaler.Com

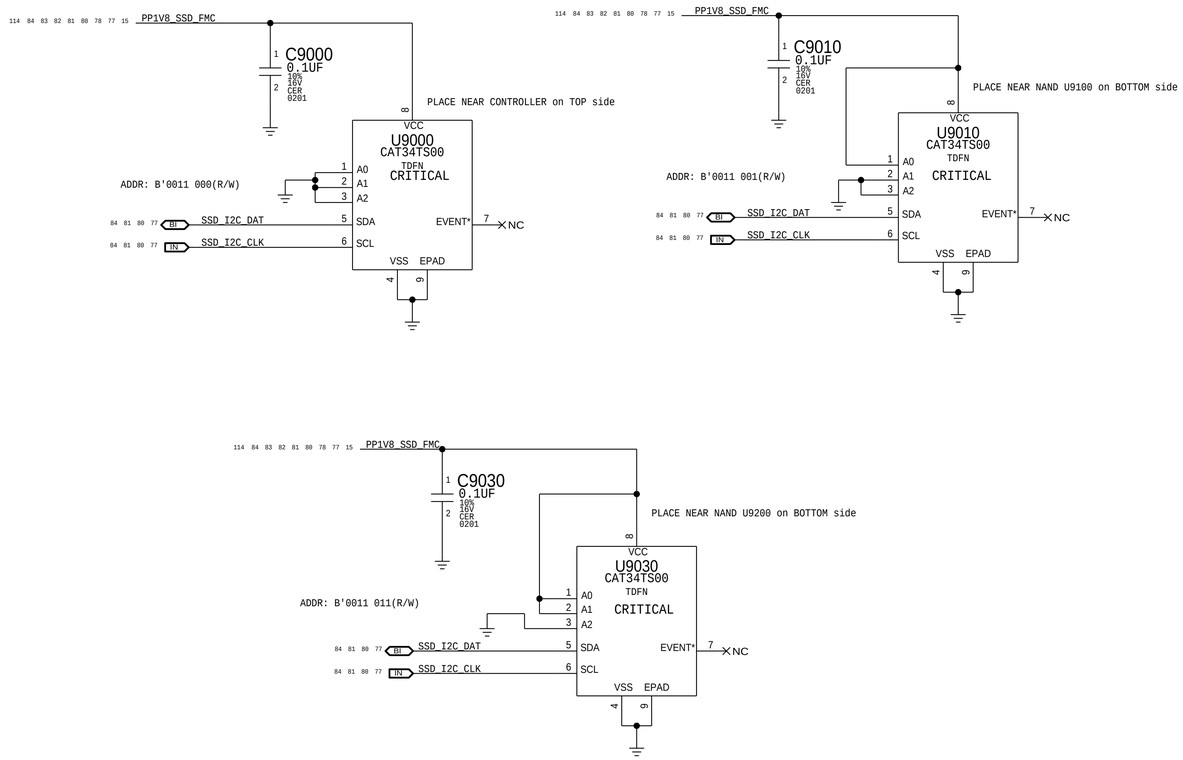

BOM_COST_GROUP=SSD

PAGE TITLE	PAGE_TITLE=TEMP SENSORS
Apple Inc.	DRAWING NUMBER 051-00647 SIZE D
	REVISION 10.0.0
NOTICE OF PROPRIETARY PROPERTY:	BRANCH dvt-fab10
	PAGE 90 OF 145
	SHEET 81 OF 121

THE INFORMATION CONTAINED HEREIN IS THE PROPRIETARY PROPERTY OF APPLE INC.
THE POSESSOR AGREES TO THE FOLLOWING:
I TO MAINTAIN THIS DOCUMENT IN CONFIDENCE
II NOT TO REPRODUCE OR COPY IT
III NOT TO REVEAL OR PUBLISH IT IN WHOLE OR PART
IV ALL RIGHTS RESERVED

WWW.AliSaler.Com

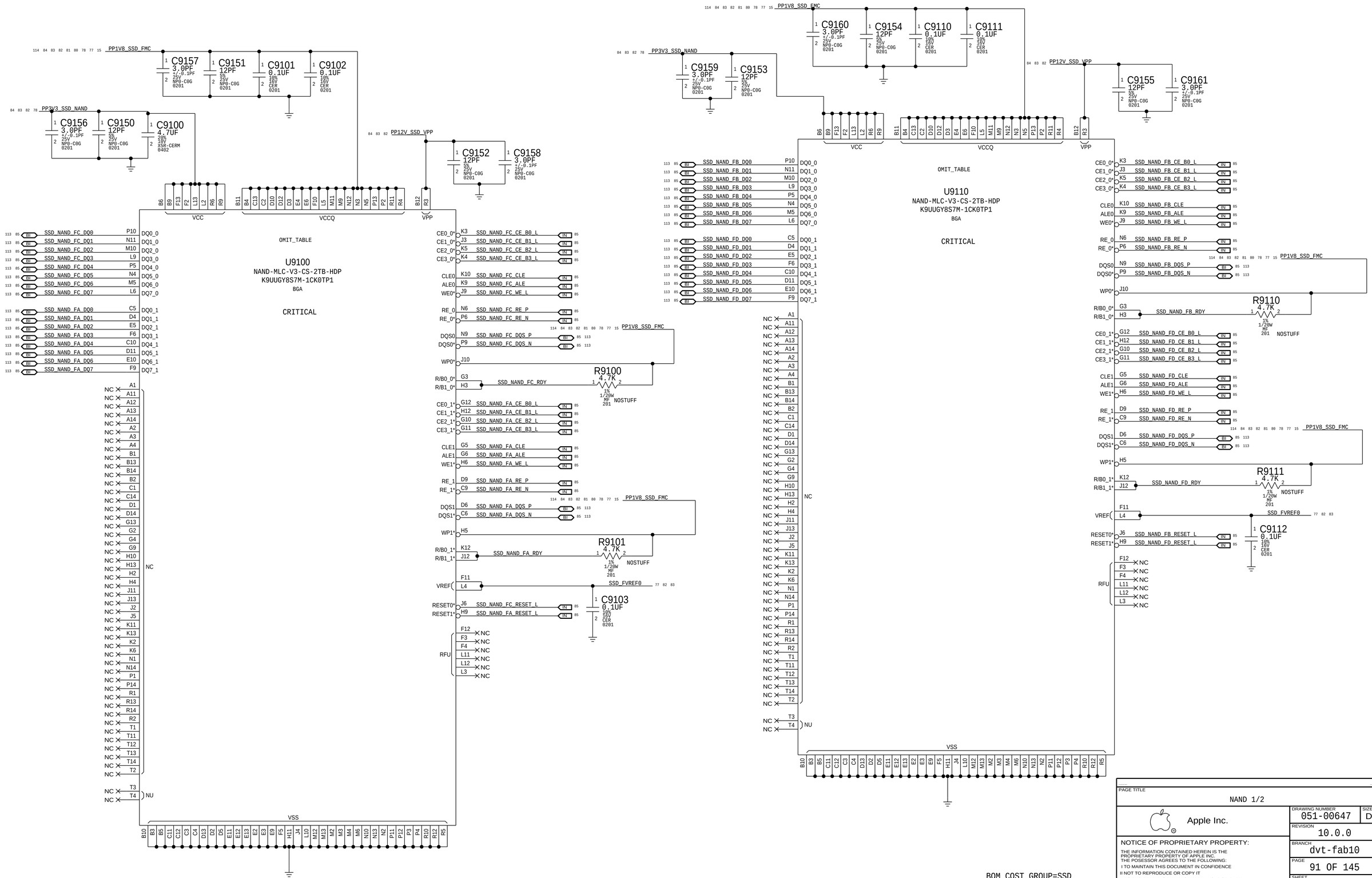

WWW.AliSaler.Com

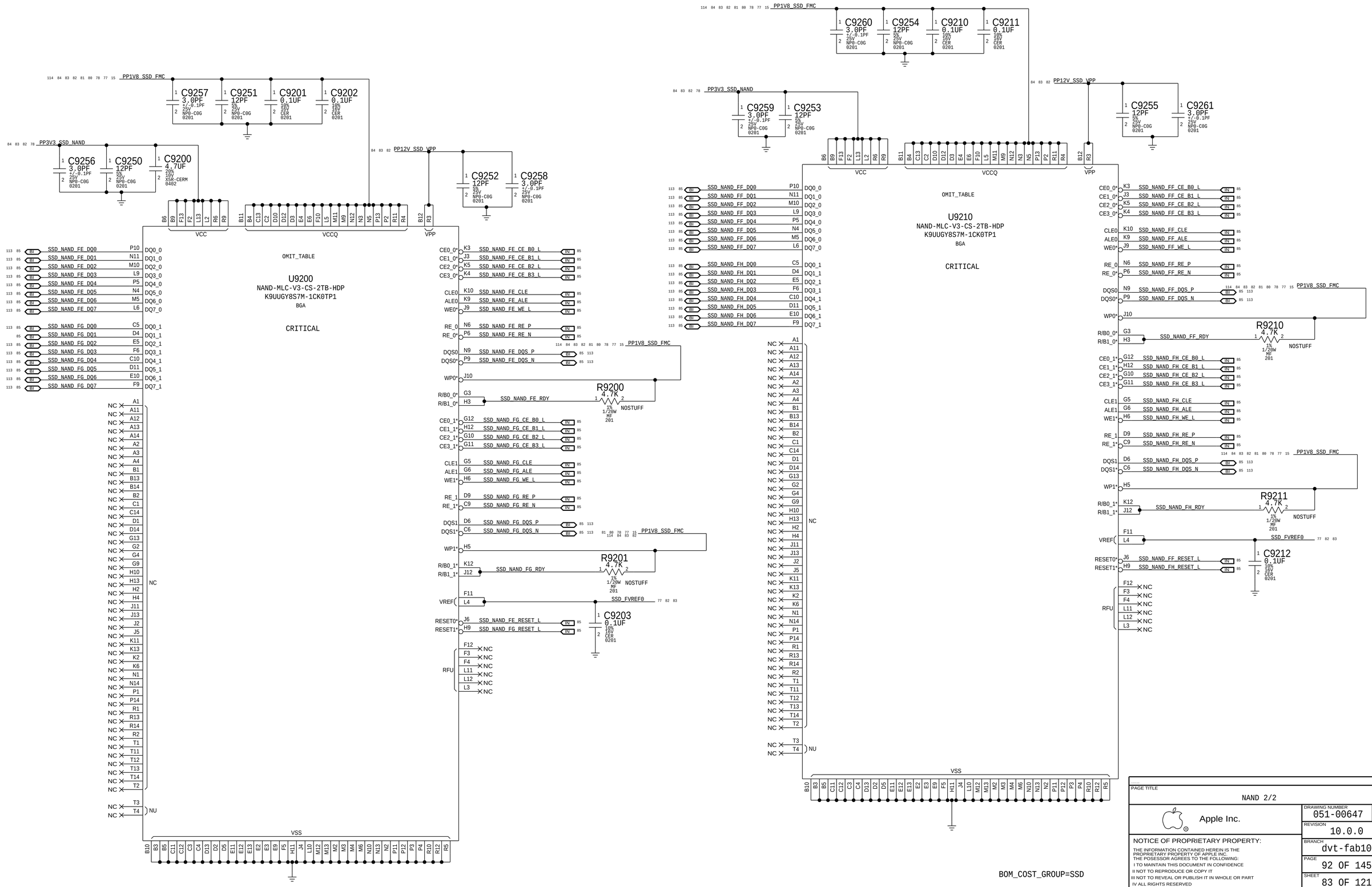

WWW.AliSaler.Com

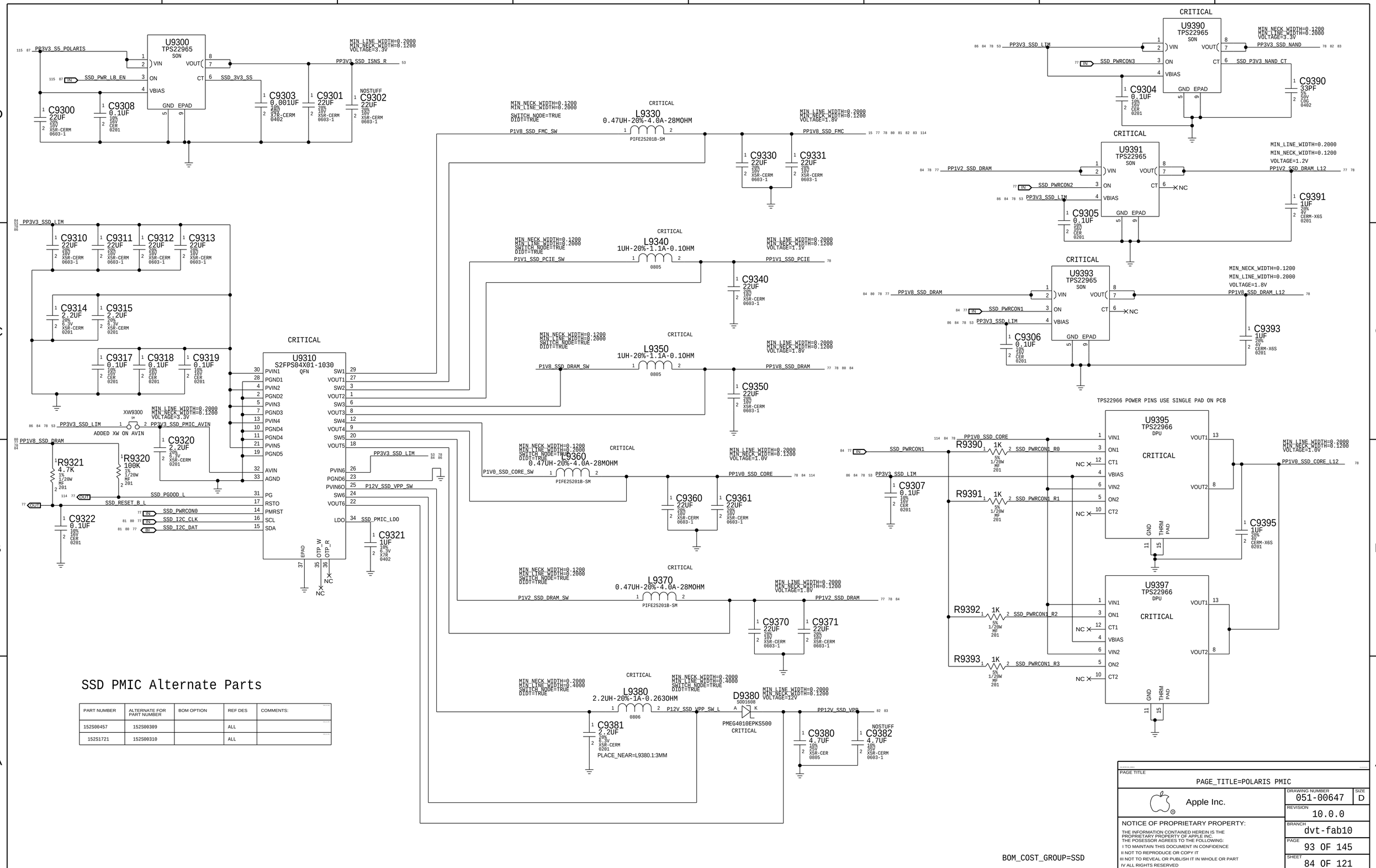

SSD PMIC Alternate Parts

PART NUMBER	ALTERNATE FOR PART NUMBER	BOM OPTION	REF DES	COMMENTS:
152S00457	152S00309		ALL	
152S1721	152S00310		ALL	

WWW.AliSaler.Com

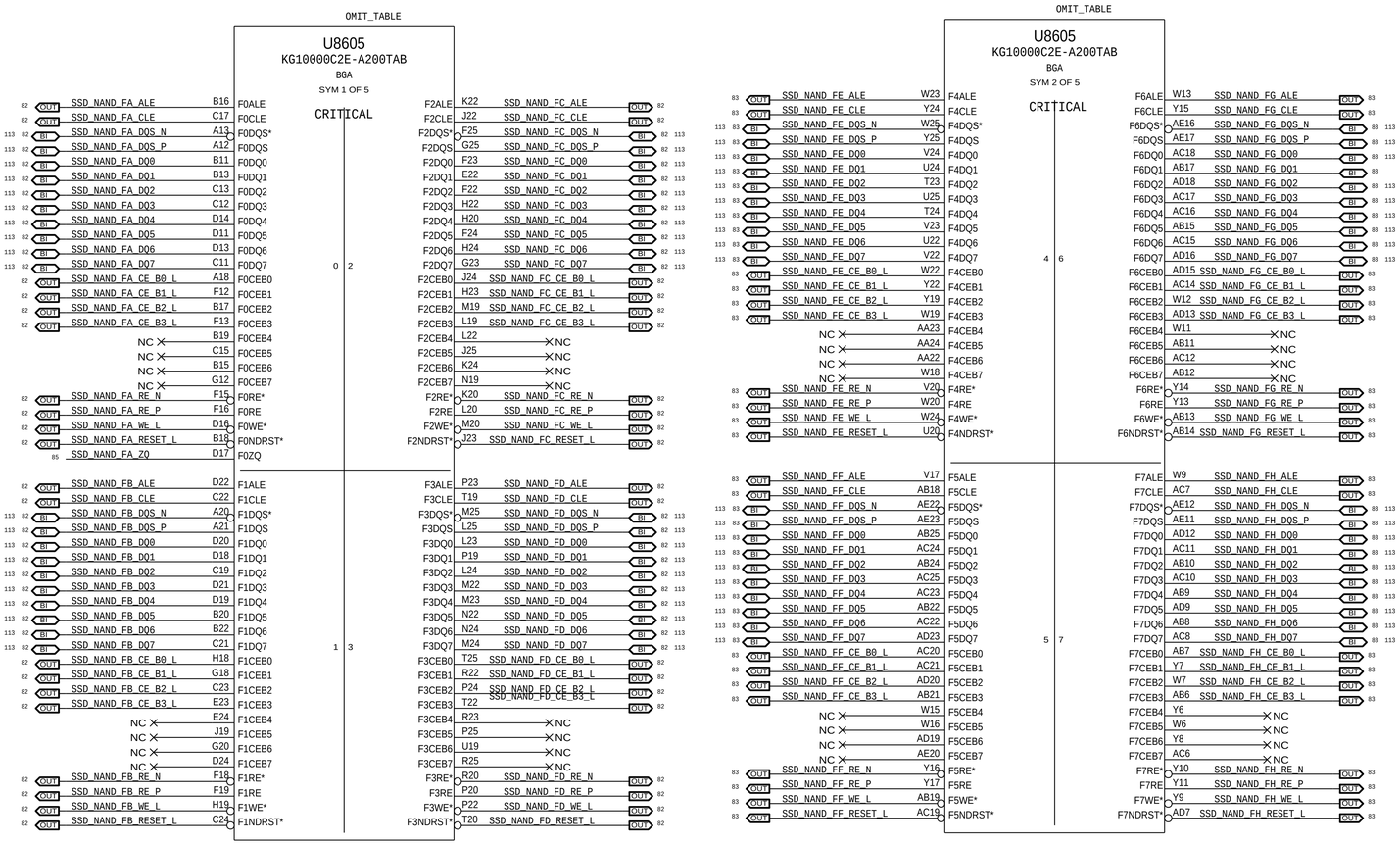

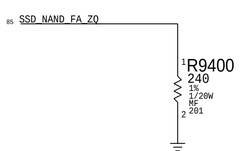

BOM_COST_GROUP=SSD

PAGE TITLE
SSD NAND VR

Apple Inc.

DRAWING NUMBER 051-00647
SIZE D
REVISION 10.0.0
BRANCH dvt-fab10
PAGE 94 OF 145
SHEET 85 OF 121

NOTICE OF PROPRIETARY PROPERTY:
THE INFORMATION CONTAINED HEREIN IS THE PROPRIETARY PROPERTY OF APPLE INC.
THE POSESSOR AGREES TO THE FOLLOWING:
I TO MAINTAIN THIS DOCUMENT IN CONFIDENCE
II NOT TO REPRODUCE OR COPY IT
III NOT TO REVEAL OR PUBLISH IT IN WHOLE OR PART
IV ALL RIGHTS RESERVED

WWW.AliSaler.Com

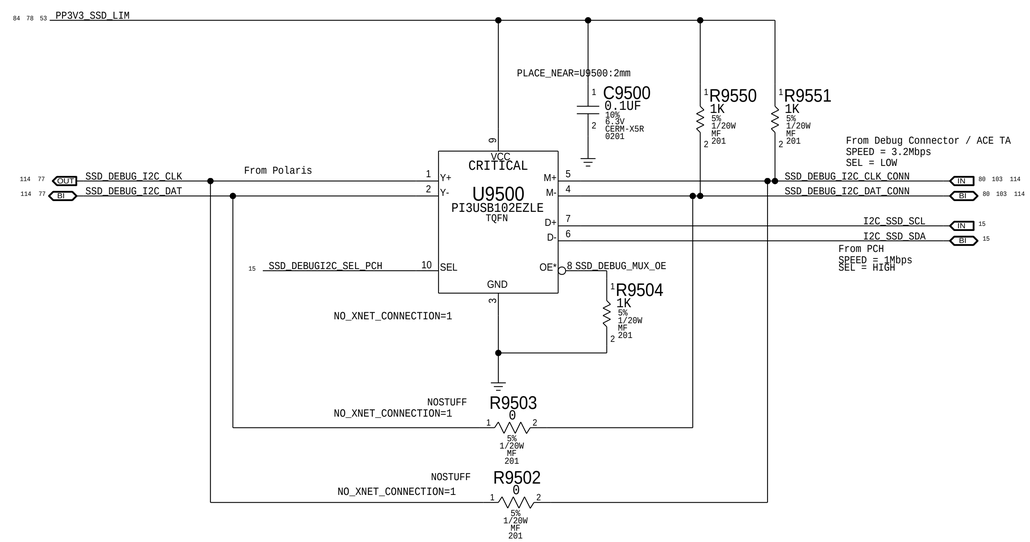

BOM_COST_GROUP=SSD

PAGE TITLE
SSD SUPPORT

Apple Inc.

DRAWING NUMBER 051-00647
SIZE D
REVISION 10.0.0
BRANCH dvt-fab10
PAGE 95 OF 145
SHEET 86 OF 121

NOTICE OF PROPRIETARY PROPERTY:
THE INFORMATION CONTAINED HEREIN IS THE PROPRIETARY PROPERTY OF APPLE INC.
THE POSESSOR AGREES TO THE FOLLOWING:
I TO MAINTAIN THIS DOCUMENT IN CONFIDENCE
II NOT TO REPRODUCE OR COPY IT
III NOT TO REVEAL OR PUBLISH IT IN WHOLE OR PART
IV ALL RIGHTS RESERVED

WWW.AliSaler.Com

LIFEBOAT

J9600
20759-042E-02
F-ST-SM

PCH Side

Pin	Signal	Dir
110	PP3V3_S5	
115 114 15	SSD_BOOT_L	IN
115 114 14	SSD_PWR_EN	IN
115 114 20 14	SSD_RESET_L	IN
115 20	SSD_CLKREQ_L	OUT
113 14	PCIE_SSD_D2R_P<0>	OUT
113 14	PCIE_SSD_D2R_N<0>	OUT
14	PCIE_SSD_R2D_C_P<0>	IN
113 14	PCIE_SSD_R2D_C_N<0>	IN
113 12	PCIE_CLK100M_SSD_P	IN
113 12	PCIE_CLK100M_SSD_N	IN

SSD Side

Pin	Signal	Dir
84 115	PP3V3_S5_POLARIS	
	VOLTAGE=3.3V MIN_LINE_WIDTH=0.2000 MIN_NECK_WIDTH=0.2000	
	NC	
77 114 115	SSD_BOOT_LB_L	OUT
84 115	SSD_PWR_LB_EN	OUT
	NC	
77 115	SSD_RESET_LB_L	OUT
77 115	SSD_CLKREQ_LB_L	IN
77 113	PCIE_SSD_D2R_LB_P<0>	IN
77 113	PCIE_SSD_D2R_LB_N<0>	IN
77 113	PCIE_SSD_R2D_LB_P<0>	OUT
77 113	PCIE_SSD_R2D_LB_N<0>	OUT
77 113	PCIE_CLK100M_SSD_LB_P	OUT
77 113	PCIE_CLK100M_SSD_LB_N	OUT
	NC	
	Detect Pin	

Connector Pinout

Pin	Signal	Pin	Signal
43	PWR	44	PWR
	SIGNAL		
1		2	
3		4	
5		6	
7		8	
9		10	
11		12	
13		14	
15		16	
17	GND_VOID=TRUE	18	GND_VOID=TRUE
19	GND_VOID=TRUE	20	GND_VOID=TRUE
21		22	
23	GND_VOID=TRUE	24	GND_VOID=TRUE
25	GND_VOID=TRUE	26	GND_VOID=TRUE
27		28	
29	GND_VOID=TRUE	30	GND_VOID=TRUE
31	GND_VOID=TRUE	32	GND_VOID=TRUE
33		34	
35		36	
37		38	
39		40	
41		42	
	PWR		
45		46	
	GND		
47		48	
49		50	
51		52	
53		54	
55		56	
57		58	
59		60	
61		62	
63		64	
65		66	
67		68	

BOM_COST_GROUP=SSD

SYNC_MASTER=X363_BBABADI SYNC_DATE=01/20/2016

PAGE TITLE
Lifeboat

Apple Inc.

DRAWING NUMBER 051-00647
SIZE D
REVISION 10.0.0
BRANCH dvt-fab10
PAGE 96 OF 145
SHEET 87 OF 121

NOTICE OF PROPRIETARY PROPERTY:
THE INFORMATION CONTAINED HEREIN IS THE PROPRIETARY PROPERTY OF APPLE INC.
THE POSESSOR AGREES TO THE FOLLOWING:
I TO MAINTAIN THIS DOCUMENT IN CONFIDENCE
II NOT TO REPRODUCE OR COPY IT
III NOT TO REVEAL OR PUBLISH IT IN WHOLE OR PART
IV ALL RIGHTS RESERVED

WWW.AliSaler.Com

PAGE TITLE

Constraints

Apple Inc.

DRAWING NUMBER	051-00647
SIZE	D
REVISION	10.0.0
BRANCH	dvt-fab10
PAGE	97 OF 145
SHEET	88 OF 121

NOTICE OF PROPRIETARY PROPERTY:

THE INFORMATION CONTAINED HEREIN IS THE PROPRIETARY PROPERTY OF APPLE INC.
THE POSESSOR AGREES TO THE FOLLOWING:
I TO MAINTAIN THIS DOCUMENT IN CONFIDENCE
II NOT TO REPRODUCE OR COPY IT
III NOT TO REVEAL OR PUBLISH IT IN WHOLE OR PART
IV ALL RIGHTS RESERVED

WWW.AliSaler.Com

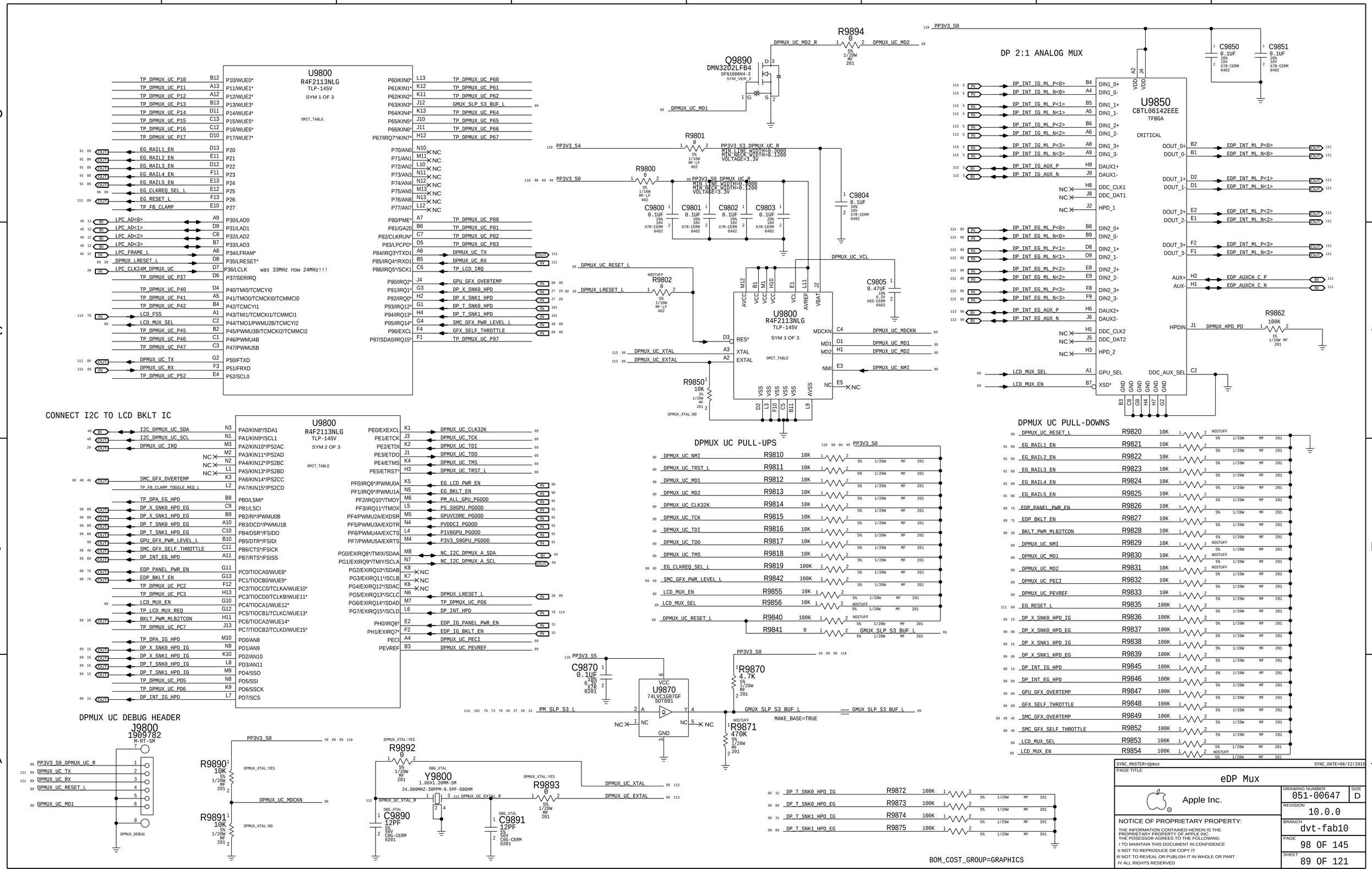

WWW.AliSaler.Com

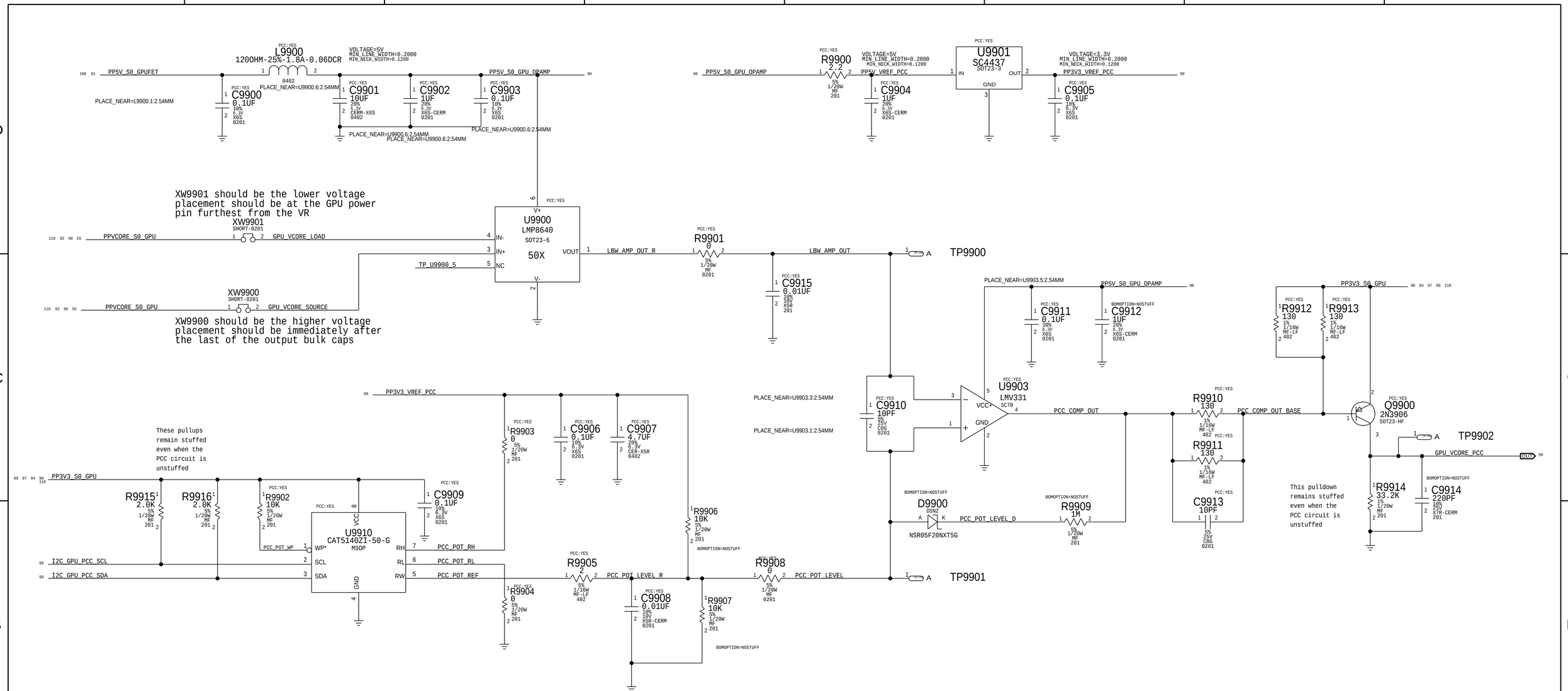

BOM_COST_GROUP=GRAPHICS

PAGE TITLE	GPU PCC
Apple Inc.	DRAWING NUMBER 051-00647 / SIZE D
	REVISION 10.0.0
NOTICE OF PROPRIETARY PROPERTY: THE INFORMATION CONTAINED HEREIN IS THE PROPRIETARY PROPERTY OF APPLE INC. THE POSESSOR AGREES TO THE FOLLOWING: I TO MAINTAIN THIS DOCUMENT IN CONFIDENCE II NOT TO REPRODUCE OR COPY IT III NOT TO REVEAL OR PUBLISH IT IN WHOLE OR PART IV ALL RIGHTS RESERVED	BRANCH dvt-fab10
	PAGE 99 OF 145
	SHEET 90 OF 121

WWW.AliSaler.Com

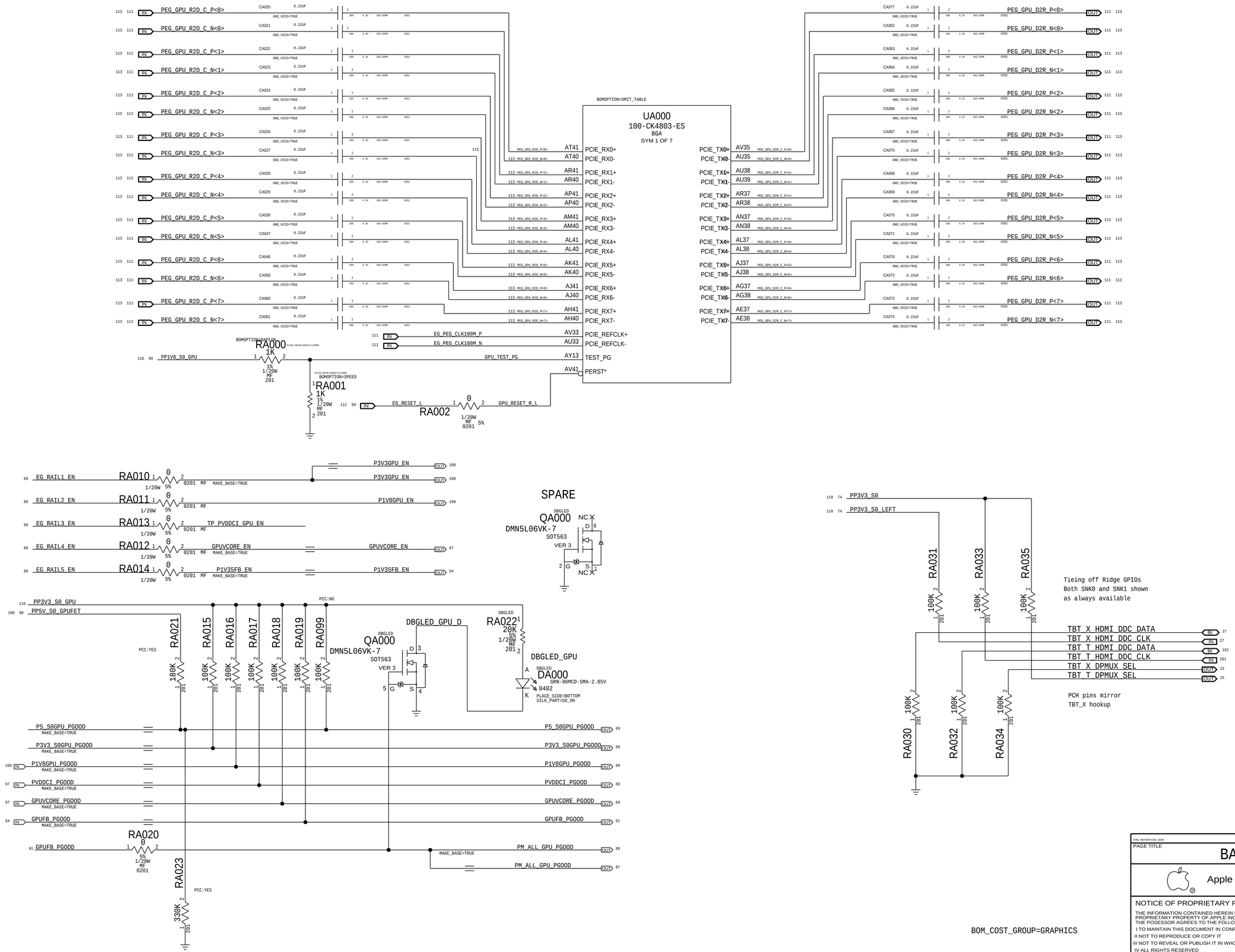

PAGE TITLE

BAFFIN PCI-E

Apple Inc.

DRAWING NUMBER 051-00647 SIZE D

REVISION 10.0.0

BRANCH dvt-fab10

PAGE 100 OF 145

SHEET 91 OF 121

NOTICE OF PROPRIETARY PROPERTY:
THE INFORMATION CONTAINED HEREIN IS THE PROPRIETARY PROPERTY OF APPLE INC.
THE POSESSOR AGREES TO THE FOLLOWING:
I TO MAINTAIN THIS DOCUMENT IN CONFIDENCE
II NOT TO REPRODUCE OR COPY IT
III NOT TO REVEAL OR PUBLISH IT IN WHOLE OR PART
IV ALL RIGHTS RESERVED

WWW.AliSaler.Com

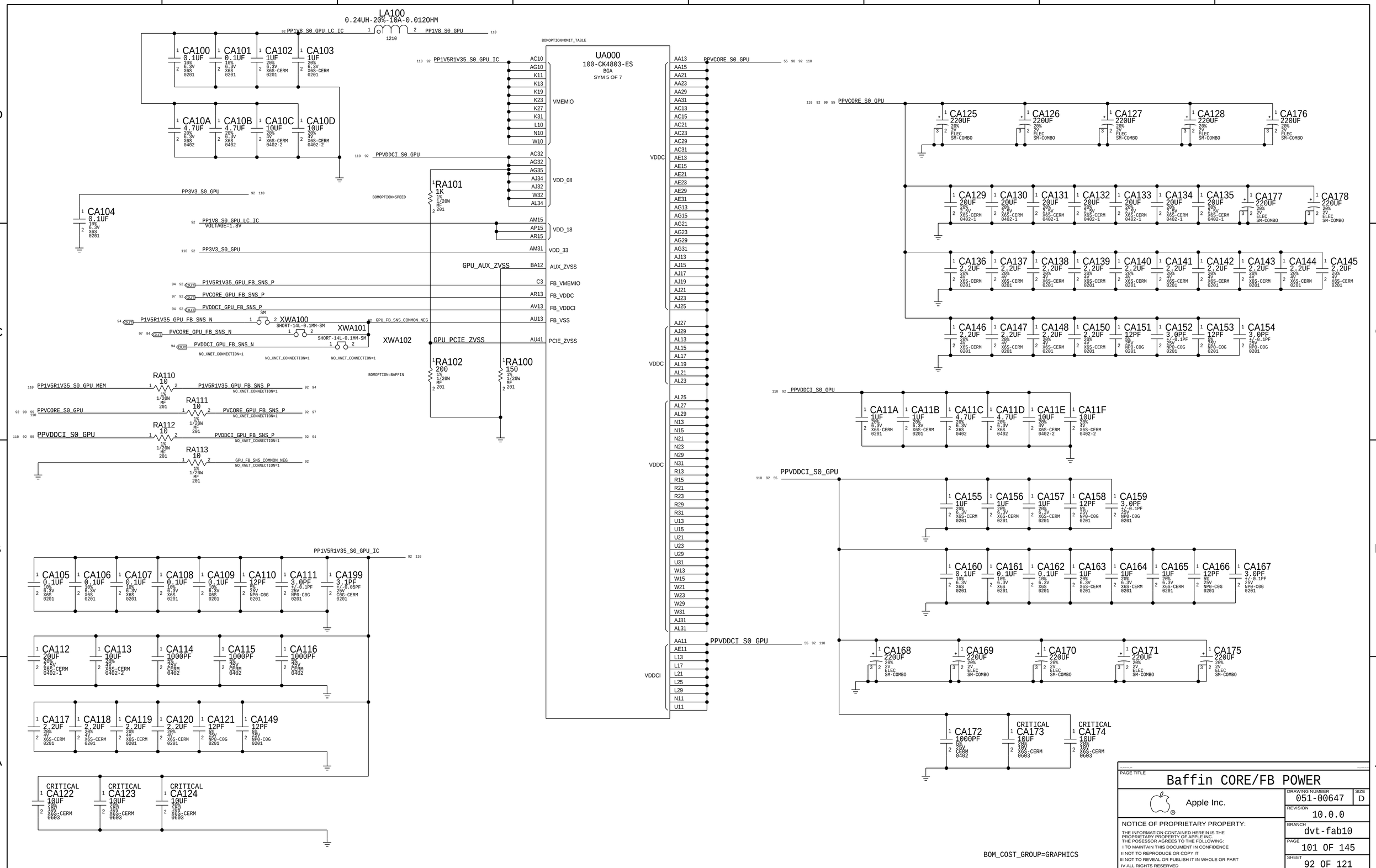

PAGE TITLE

Baffin CORE/FB POWER

Apple Inc.

DRAWING NUMBER 051-00647 SIZE D

REVISION 10.0.0

BRANCH dvt-fab10

PAGE 101 OF 145

SHEET 92 OF 121

NOTICE OF PROPRIETARY PROPERTY:
THE INFORMATION CONTAINED HEREIN IS THE PROPRIETARY PROPERTY OF APPLE INC.
THE POSESSOR AGREES TO THE FOLLOWING:
I TO MAINTAIN THIS DOCUMENT IN CONFIDENCE
II NOT TO REPRODUCE OR COPY IT
III NOT TO REVEAL OR PUBLISH IT IN WHOLE OR PART
IV ALL RIGHTS RESERVED

WWW.AliSaler.Com

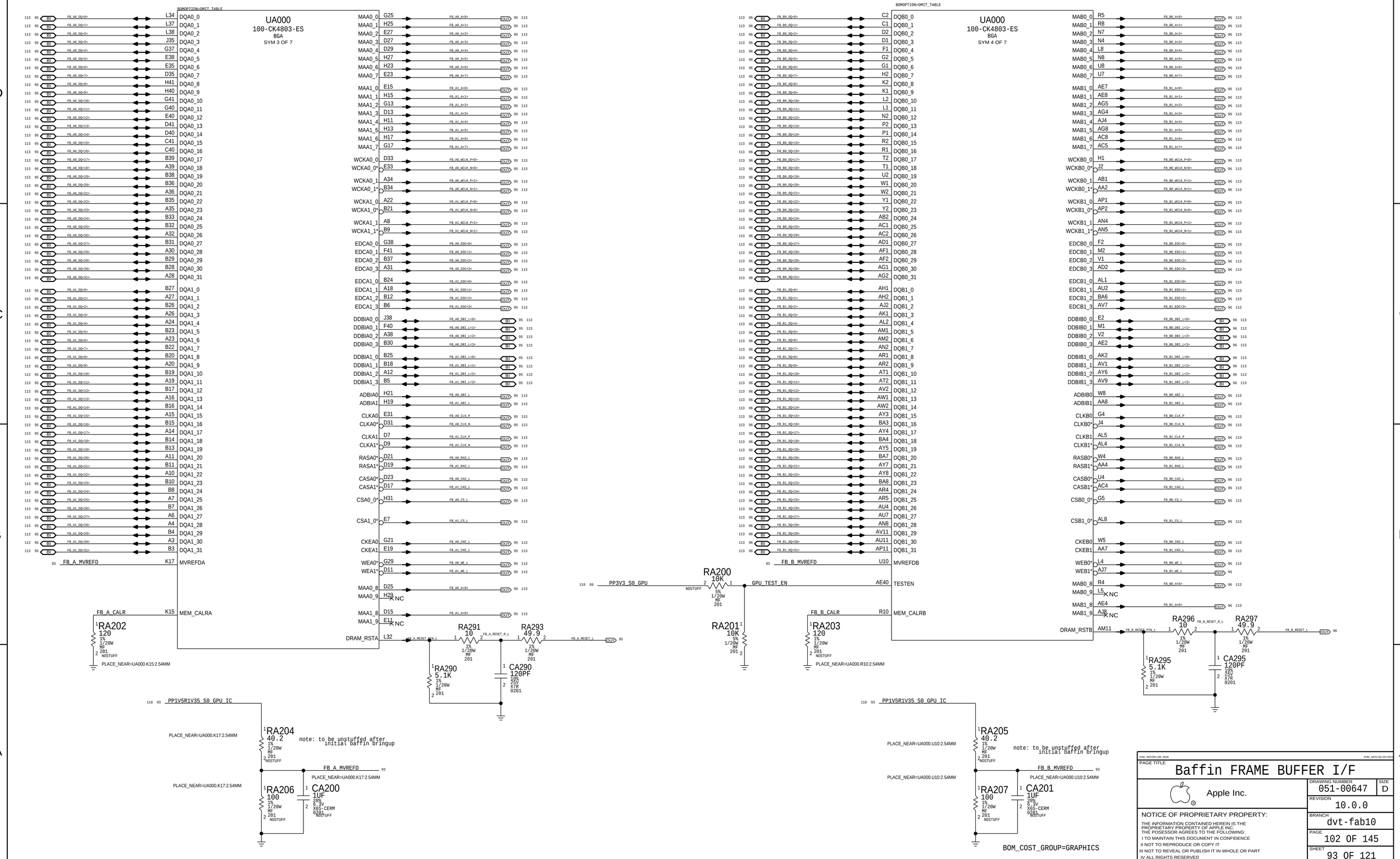

WWW.AliSaler.Com

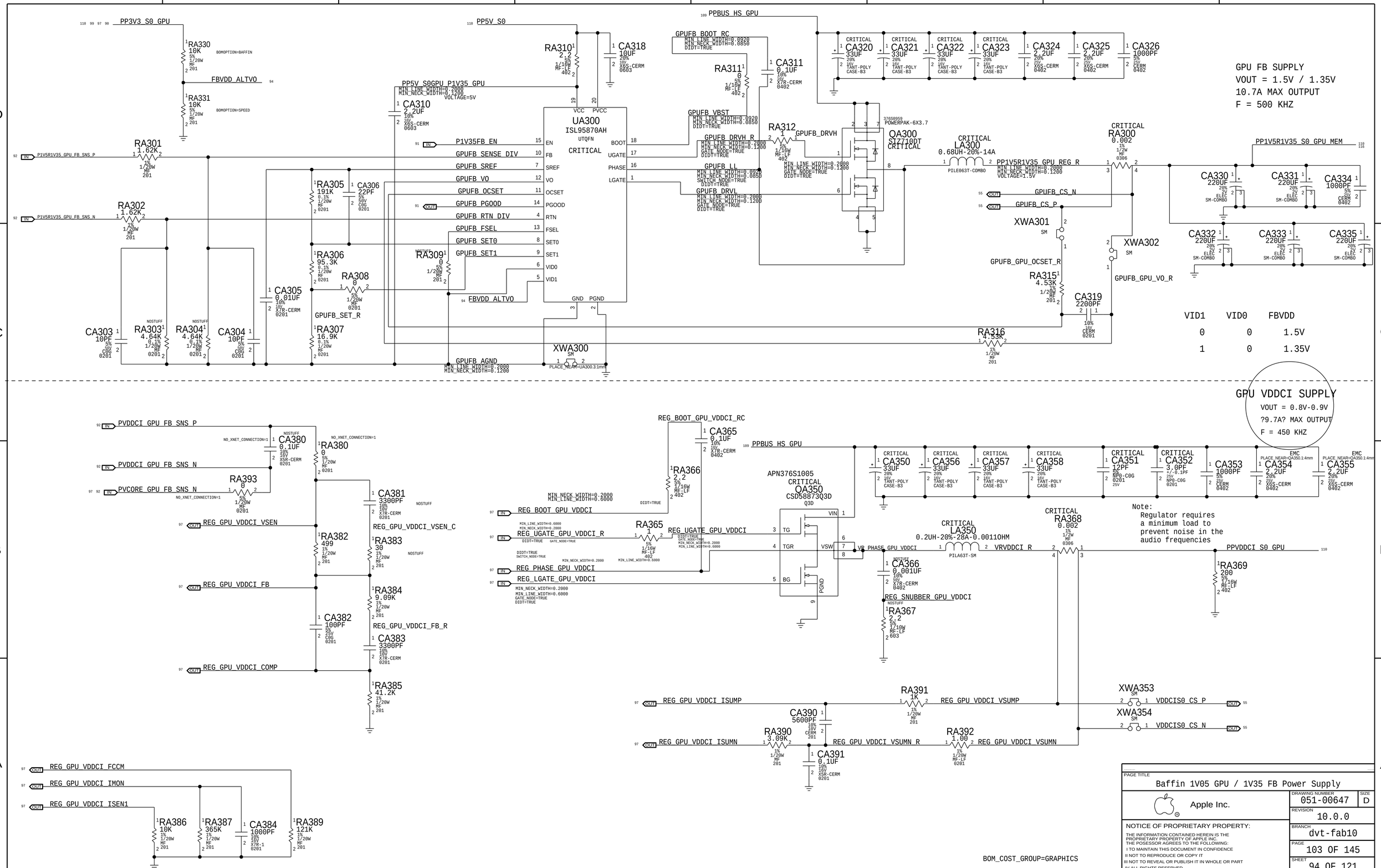

PAGE TITLE
Baffin 1V05 GPU / 1V35 FB Power Supply

Apple Inc.

DRAWING NUMBER 051-00647 SIZE D
REVISION 10.0.0
BRANCH dvt-fab10
PAGE 103 OF 145
SHEET 94 OF 121

NOTICE OF PROPRIETARY PROPERTY:
THE INFORMATION CONTAINED HEREIN IS THE PROPRIETARY PROPERTY OF APPLE INC.
THE POSESSOR AGREES TO THE FOLLOWING:
I TO MAINTAIN THIS DOCUMENT IN CONFIDENCE
II NOT TO REPRODUCE OR COPY IT
III NOT TO REVEAL OR PUBLISH IT IN WHOLE OR PART
IV ALL RIGHTS RESERVED

WWW.AliSaler.Com

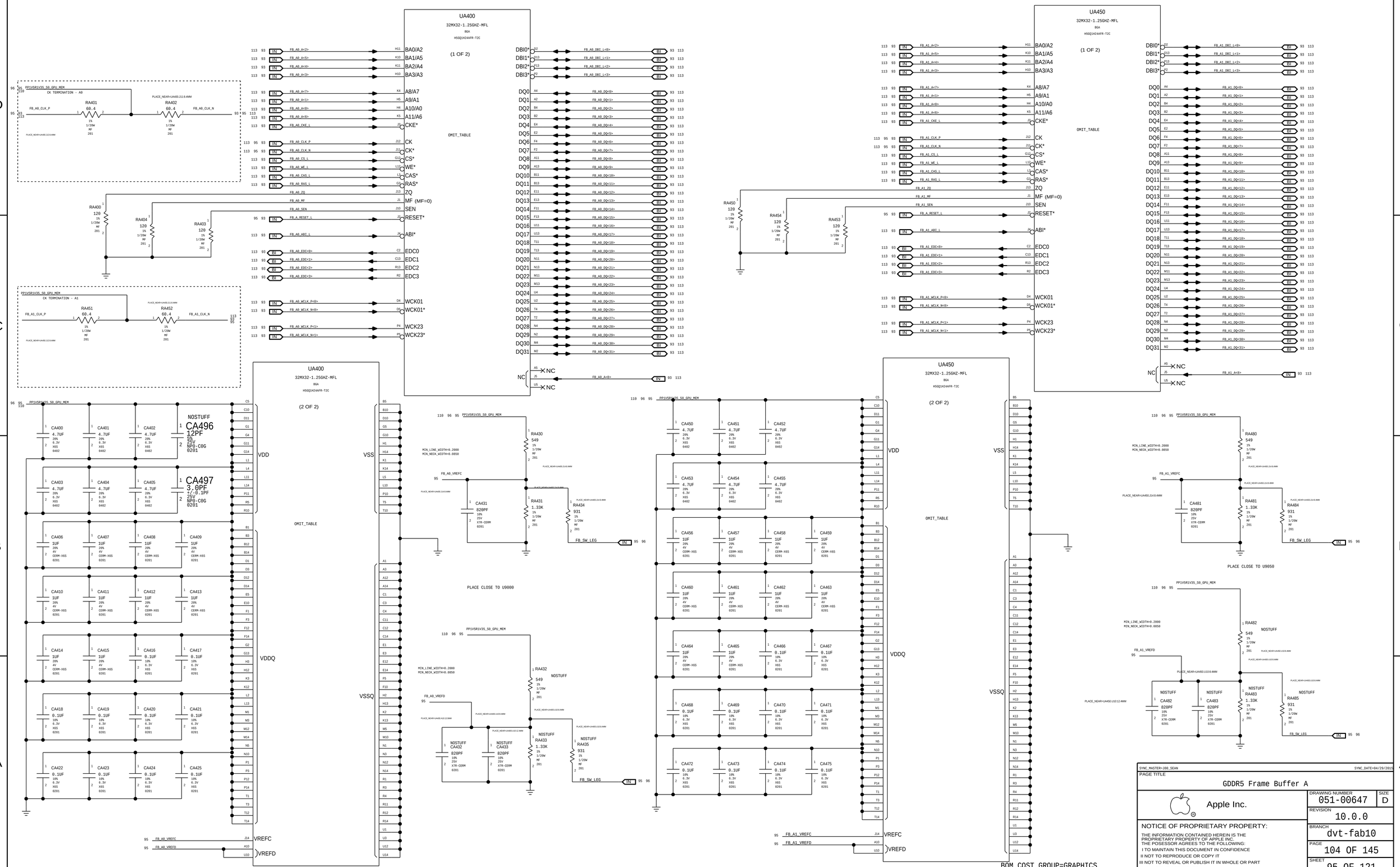

WWW.AliSaler.Com

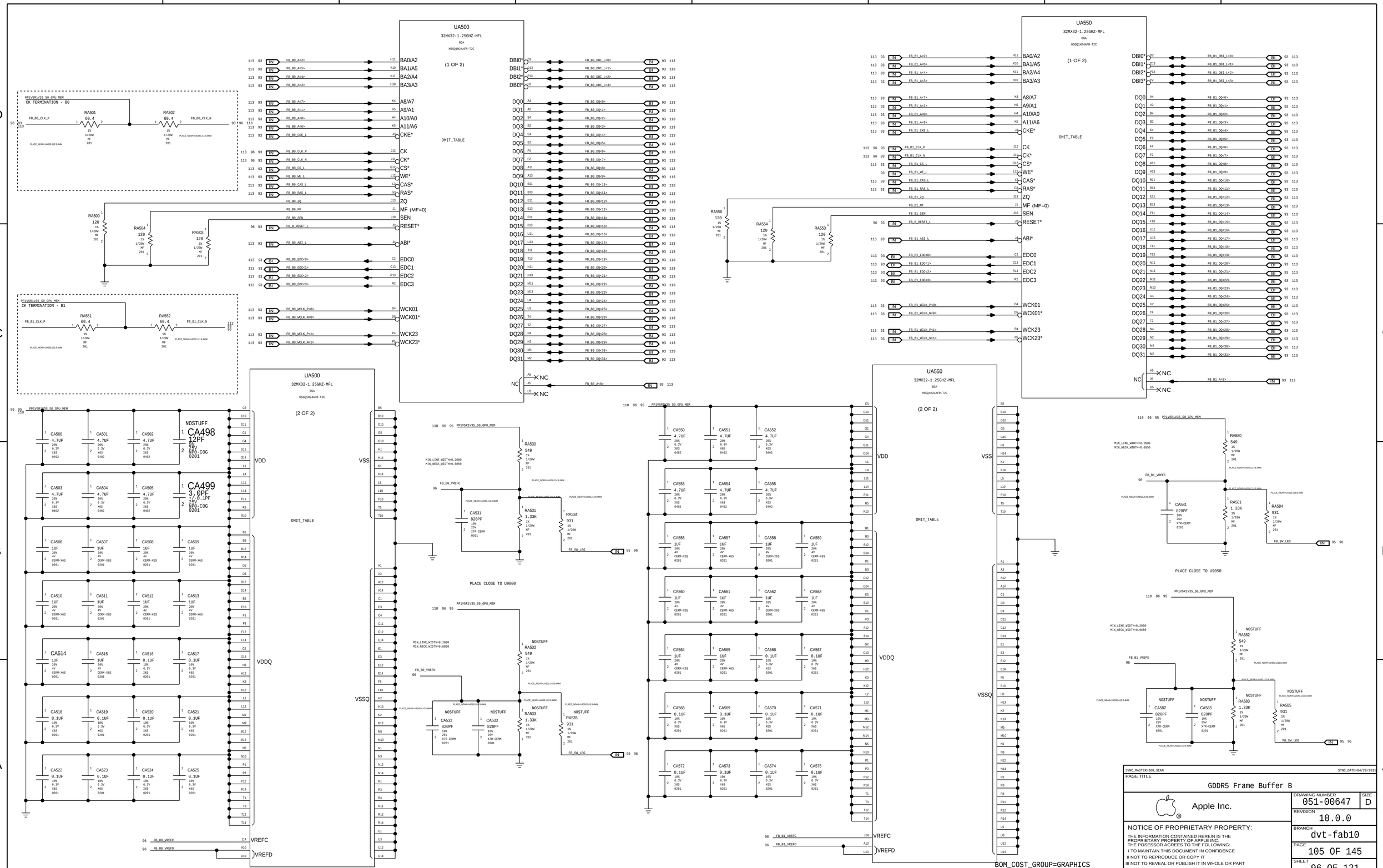

SYNC_MASTER=J80_SEAN SYNC_DATE=04/29/2015

PAGE TITLE

GDDR5 Frame Buffer B

Apple Inc.

DRAWING NUMBER	SIZE
051-00647	D
REVISION	
10.0.0	
BRANCH	
dvt-fab10	
PAGE	
105 OF 145	
SHEET	
96 OF 121	

NOTICE OF PROPRIETARY PROPERTY:
THE INFORMATION CONTAINED HEREIN IS THE PROPRIETARY PROPERTY OF APPLE INC.
THE POSESSOR AGREES TO THE FOLLOWING:
I TO MAINTAIN THIS DOCUMENT IN CONFIDENCE
II NOT TO REPRODUCE OR COPY IT
III NOT TO REVEAL OR PUBLISH IT IN WHOLE OR PART
IV ALL RIGHTS RESERVED

WWW.AliSaler.Com

PART NUMBER	QTY	DESCRIPTION	REFERENCE DES	CRITICAL	BOM OPTION
376S00174	2	MOSFET,CTRL+SYNC,25V,4.1/1.4MΩ,QFN32,6x6	QA640,QA650	CRITICAL	

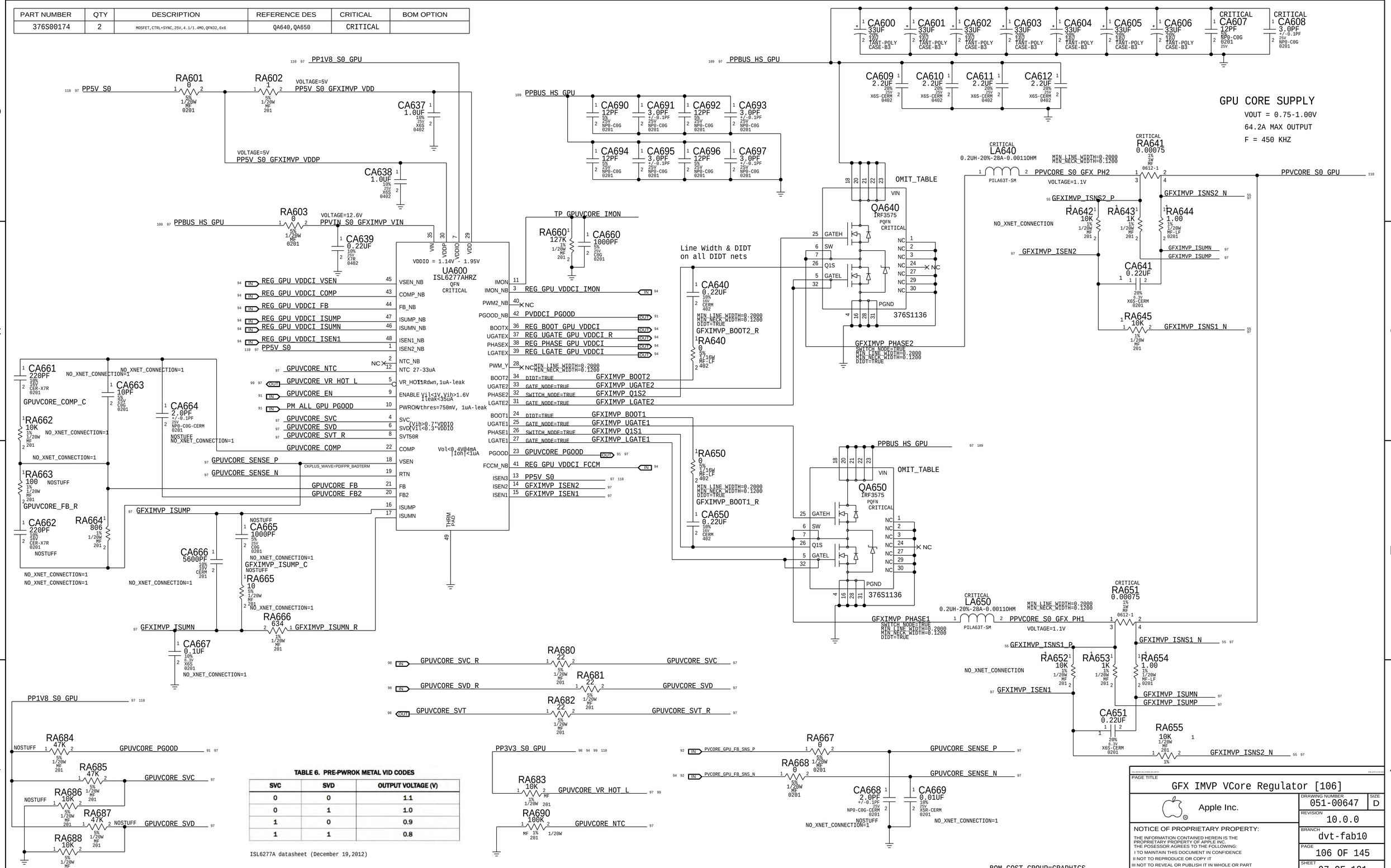

TABLE 6. PRE-PWROK METAL VID CODES

SVC	SVD	OUTPUT VOLTAGE (V)
0	0	1.1
0	1	1.0
1	0	0.9
1	1	0.8

ISL6277A datasheet (December 19,2012)

PAGE TITLE
GFX IMVP VCore Regulator [106]

Apple Inc.

DRAWING NUMBER 051-00647 SIZE D
REVISION 10.0.0
BRANCH dvt-fab10
PAGE 106 OF 145
SHEET 97 OF 121

NOTICE OF PROPRIETARY PROPERTY:
THE INFORMATION CONTAINED HEREIN IS THE PROPRIETARY PROPERTY OF APPLE INC.
THE POSESSOR AGREES TO THE FOLLOWING:
I TO MAINTAIN THIS DOCUMENT IN CONFIDENCE
II NOT TO REPRODUCE OR COPY IT
III NOT TO REVEAL OR PUBLISH IT IN WHOLE OR PART
IV ALL RIGHTS RESERVED

WWW.AliSaler.Com

former site of the SPEED MLPS STRAPS

PCIe Gen3 enabled, Half-Swing, TX De-emp enabled
VBIOS disabled, Boot from EFI
VGA enabled
All power audio-capable display output
256MB FB Aperture Size

PS_0:	01001	82nF	8.45k	2k
PS_1:	10001	10nF	8.45k	2k
PS_2:	10000	10nF	NC	4.75k
PS_3:	00000	680nF	NC	4.75k

NOTICE THE ANNOYING MIX OF 3.3V AND 1.8V PULL-UPS

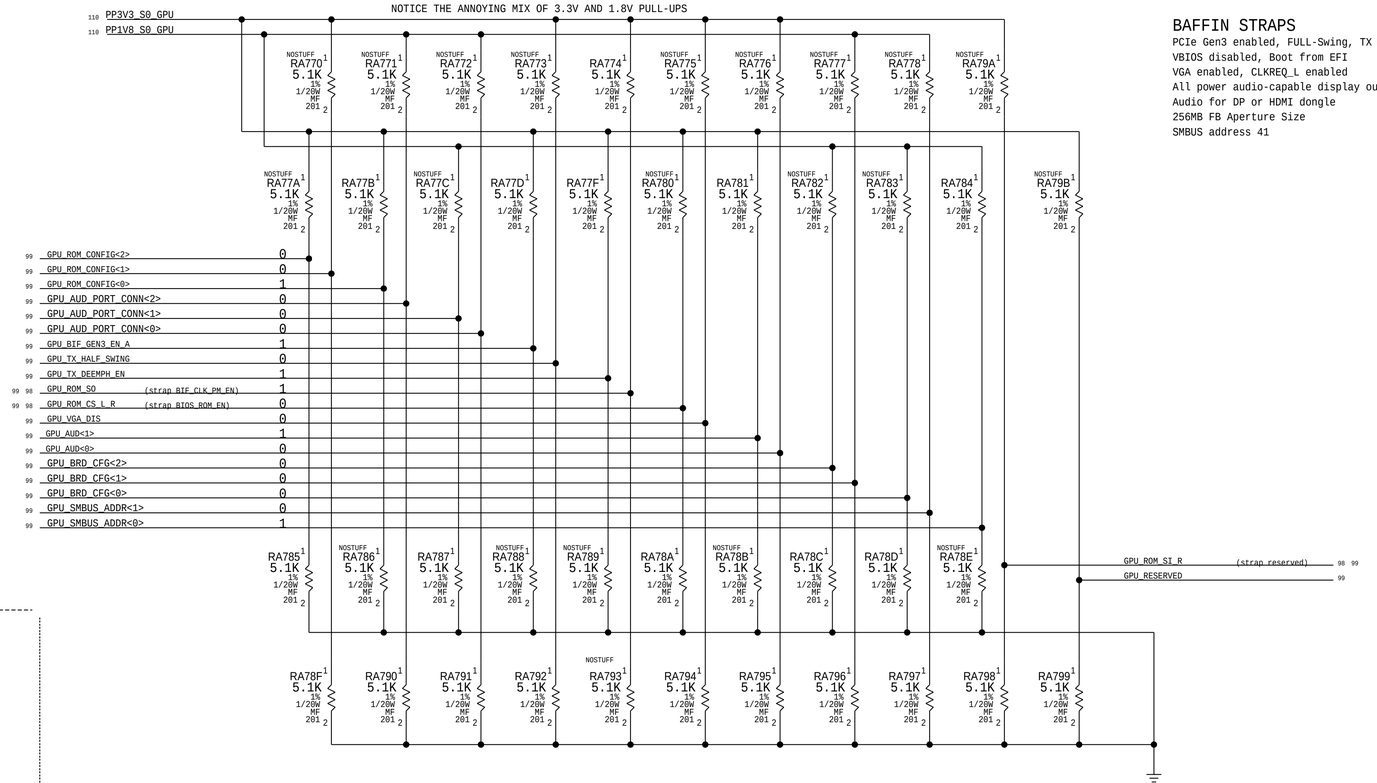

BAFFIN STRAPS

PCIe Gen3 enabled, FULL-Swing, TX De-emp enabled
VBIOS disabled, Boot from EFI
VGA enabled, CLKREQ_L enabled
All power audio-capable display output
Audio for DP or HDMI dongle
256MB FB Aperture Size
SMBUS address 41

Former site of the GPU SVI2 VOLTAGE TRANSLATION SPEED ONLY

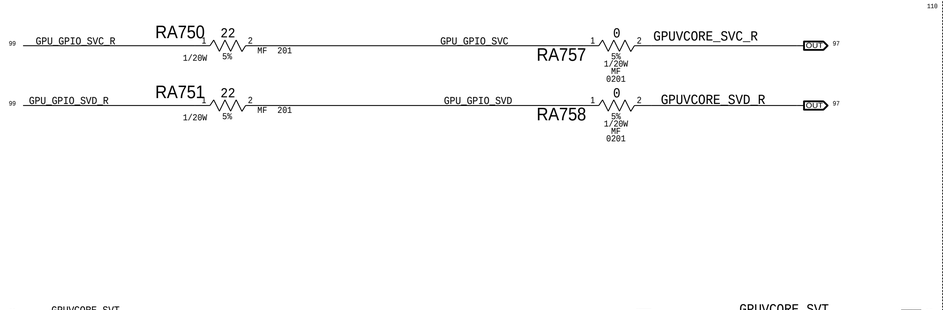

GPU CLKREQ GATING

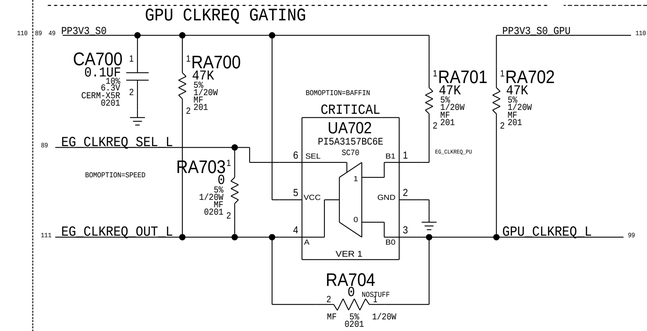

SEL = 0 : PCH CLKREQ CONNECTED TO GPU
SEL = 1 : PCH CLKREQ TIED TO PULLUP

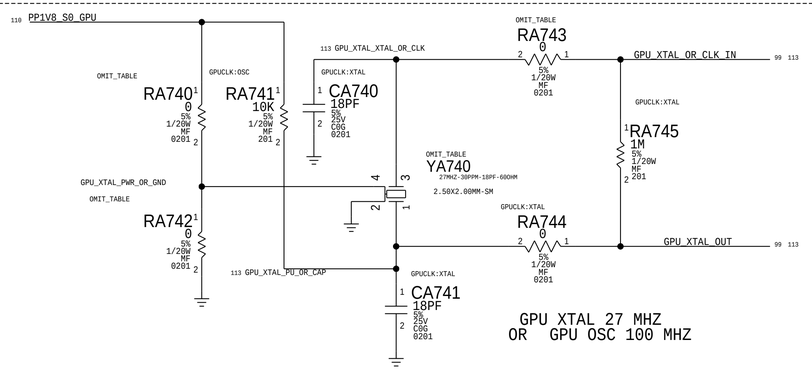

PART NUMBER	QTY	DESCRIPTION	REFERENCE DES	CRITICAL	BOM OPTION
197S0499	1	XTAL,27.000MHZ,30PPM,12PF,2.5x2.0MM	YA740	CRITICAL	GPUCLK:XTAL
197S00056	1	OSC,MEMS,100MHZ,+/-20PPM,1.8V,2520	YA740	CRITICAL	GPUCLK:OSC
117S0201	1	RES,0 OHM,5%,0201	RA743	CRITICAL	GPUCLK:XTAL
117S0080	1	RES,33 OHM,5%,0201	RA743	CRITICAL	GPUCLK:OSC
155S0387	1	FERRITE BEAD, 4700HM,0.1A,1.5MOHM DCR,060	RA740	CRITICAL	GPUCLK:OSC
117S0201	1	RES,0 OHM,5%,0201	RA742	CRITICAL	GPUCLK:XTAL
132S0444	1	CAP,CER,X5R,0.1UF,10%,6.3V,0201	RA742	CRITICAL	GPUCLK:OSC

GPU ROM

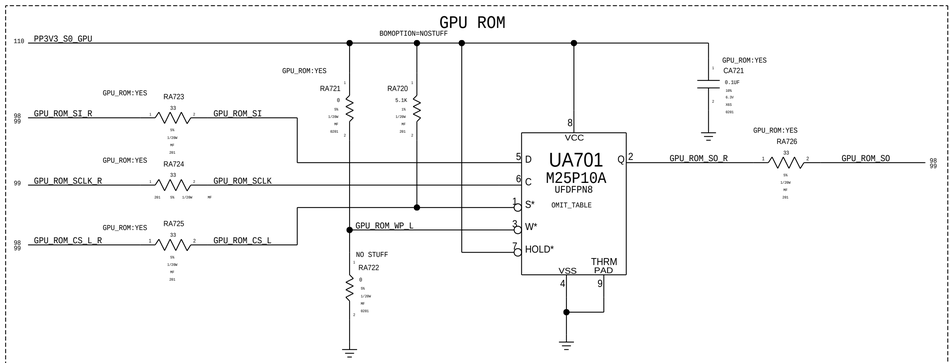

GPU JTAG

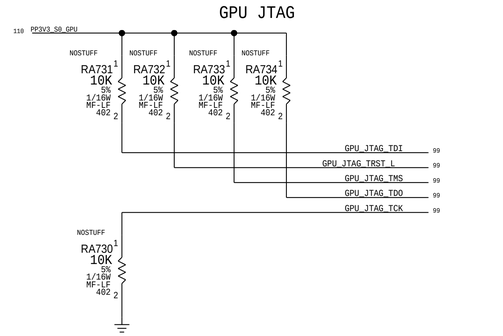

BOM_COST_GROUP=GRAPHICS

PAGE TITLE: Baffin GPIOs,CLK & Straps

Apple Inc.

DRAWING NUMBER: 051-00647 SIZE: D
REVISION: 10.0.0
BRANCH: dvt-fab10
PAGE: 107 OF 145
SHEET: 98 OF 121

NOTICE OF PROPRIETARY PROPERTY:
THE INFORMATION CONTAINED HEREIN IS THE PROPRIETARY PROPERTY OF APPLE INC.
THE POSESSOR AGREES TO THE FOLLOWING:
I TO MAINTAIN THIS DOCUMENT IN CONFIDENCE
II NOT TO REPRODUCE OR COPY IT
III NOT TO REVEAL OR PUBLISH IT IN WHOLE OR PART
IV ALL RIGHTS RESERVED

WWW.AliSaler.Com

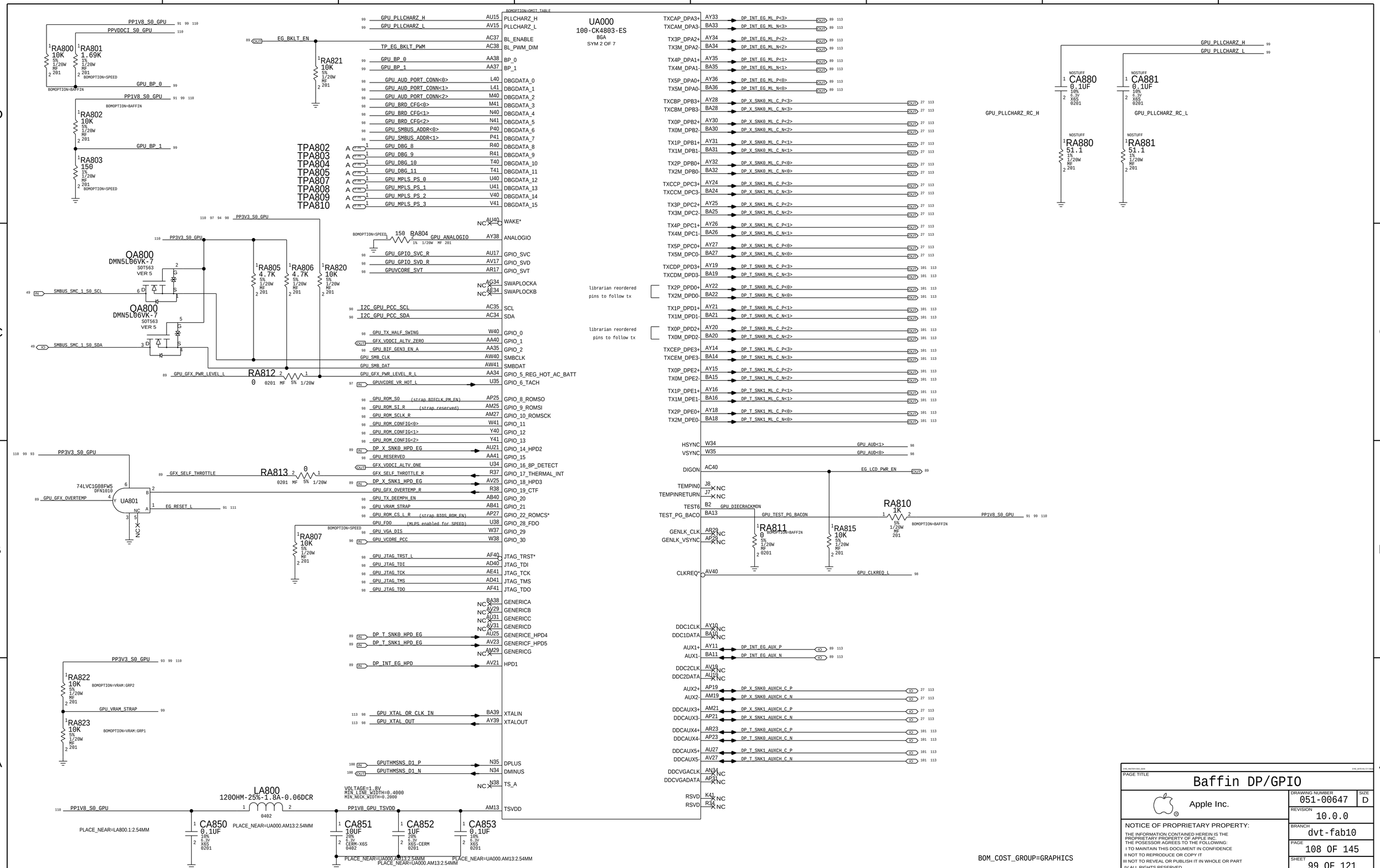

WWW.AliSaler.Com

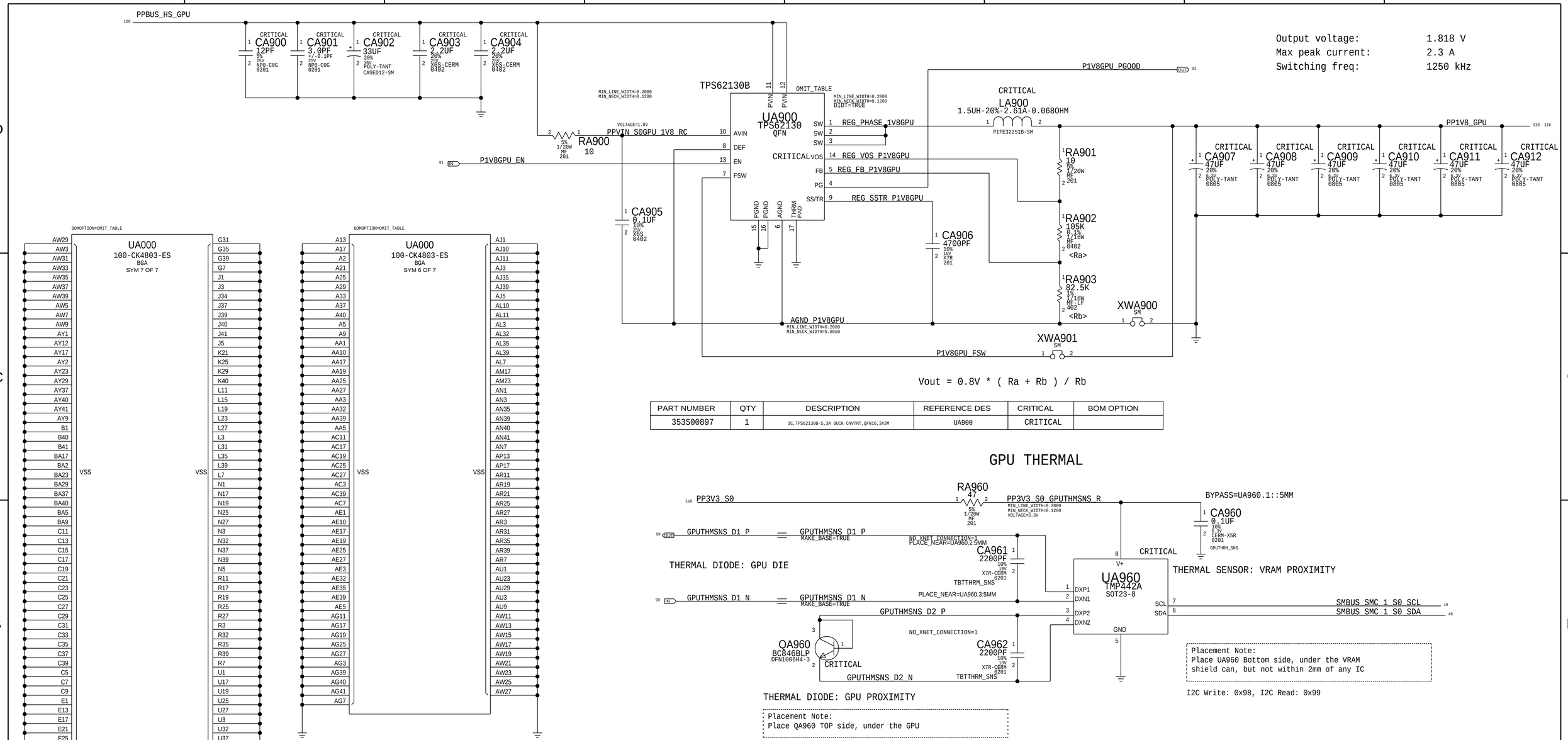

PART NUMBER	QTY	DESCRIPTION	REFERENCE DES	CRITICAL	BOM OPTION
353S00897	1	IC,TPS62130B-S,3A BUCK CNVTRT,QFN16,3X3M	UA900	CRITICAL	

GPU THERMAL

3.3V S0 GPU Switch

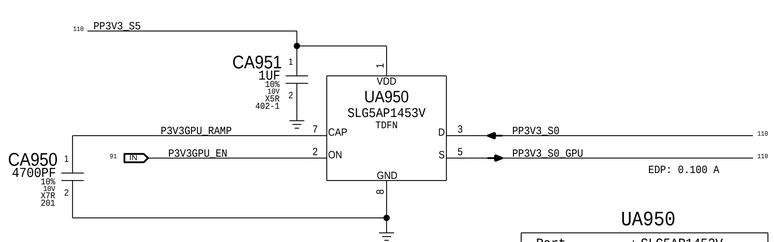

UA950

Part	SLG5AP1453V
Type	Load Switch
R(on) @ 5.3A	7.8 mOhm Typ 9.6 mOhm Max
Current	5.3A Max

5V S0 GPU Switch

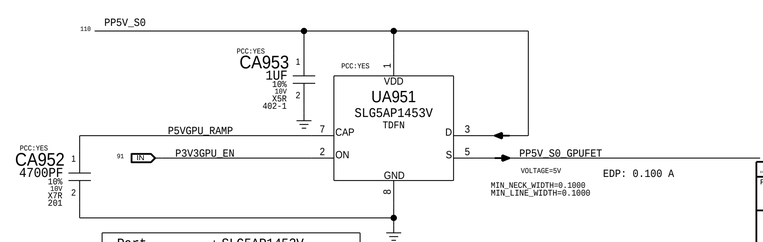

UA951

Part	SLG5AP1453V
Type	Load Switch
R(on) @ 5.3A	7.8 mOhm Typ 9.6 mOhm Max
Current	5.3A Max

BOM_COST_GROUP=GRAPHICS

PAGE TITLE
Baffin VSS & MISC

Apple Inc.

DRAWING NUMBER 051-00647 SIZE D
REVISION 10.0.0
BRANCH dvt-fab10
PAGE 109 OF 145
SHEET 100 OF 121

NOTICE OF PROPRIETARY PROPERTY:
THE INFORMATION CONTAINED HEREIN IS THE PROPRIETARY PROPERTY OF APPLE INC.
THE POSESSOR AGREES TO THE FOLLOWING:
I TO MAINTAIN THIS DOCUMENT IN CONFIDENCE
II NOT TO REPRODUCE OR COPY IT
III NOT TO REVEAL OR PUBLISH IT IN WHOLE OR PART
IV ALL RIGHTS RESERVED

WWW.AliSaler.Com

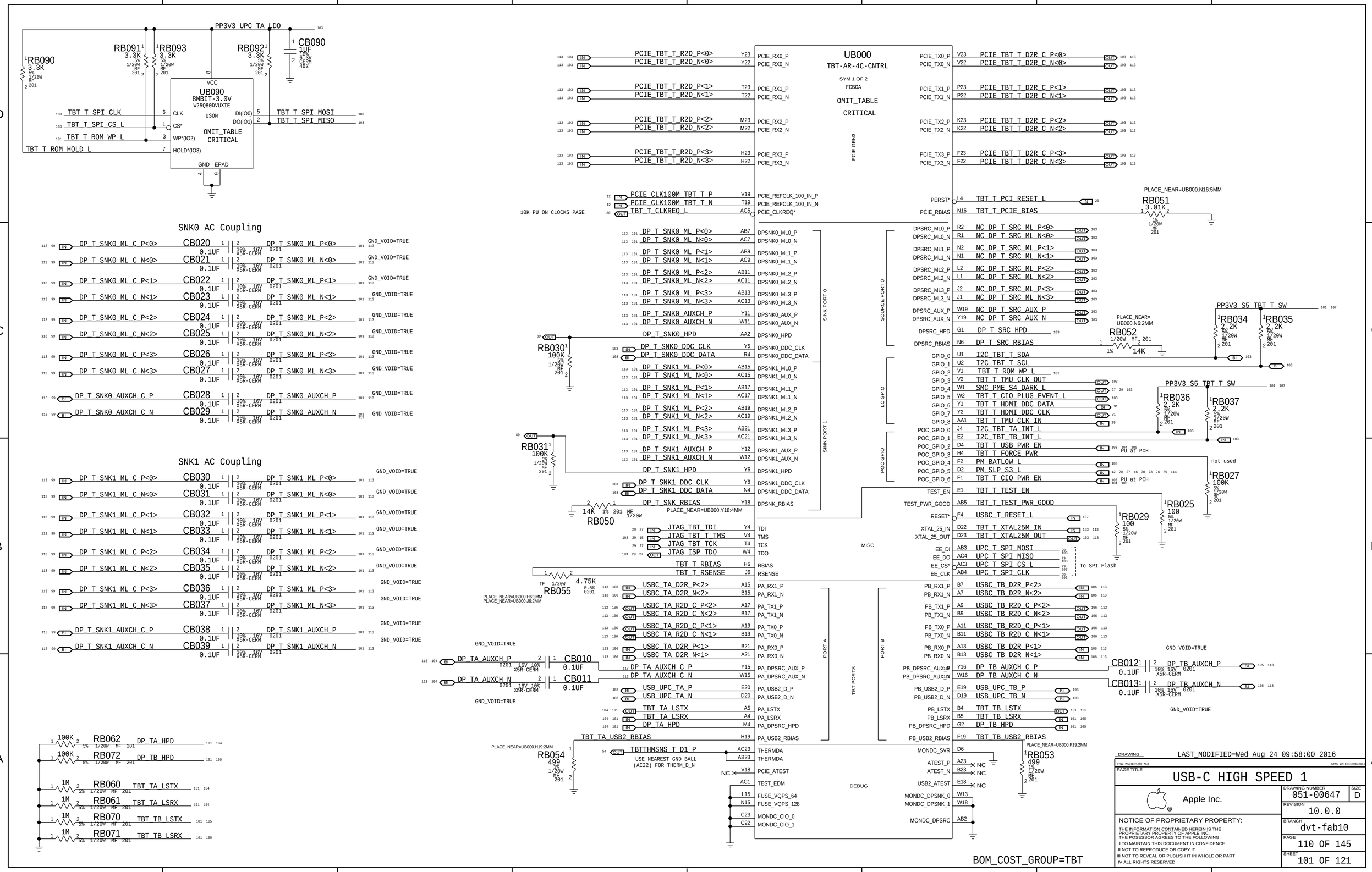

WWW.AliSaler.Com

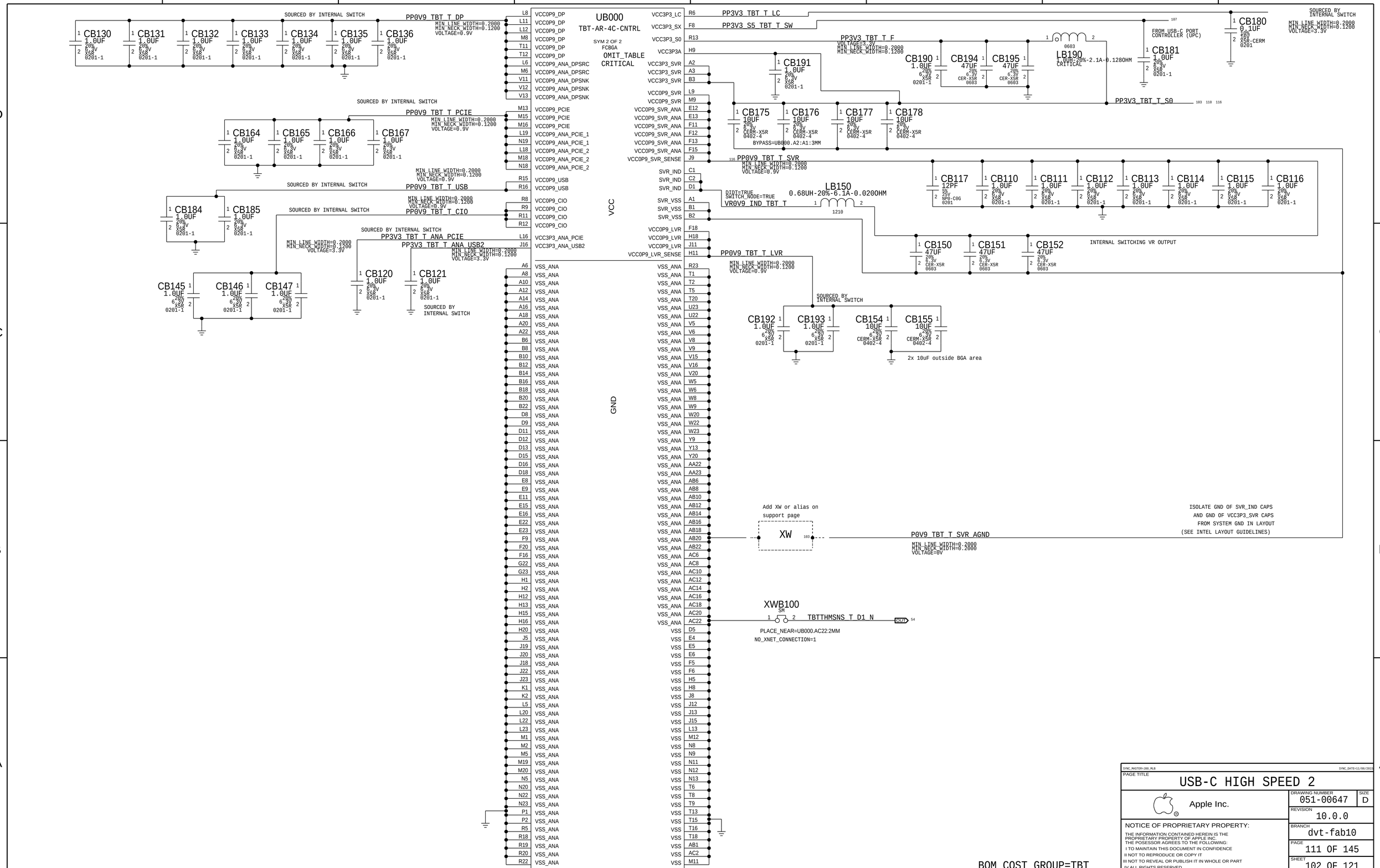

WWW.AliSaler.Com

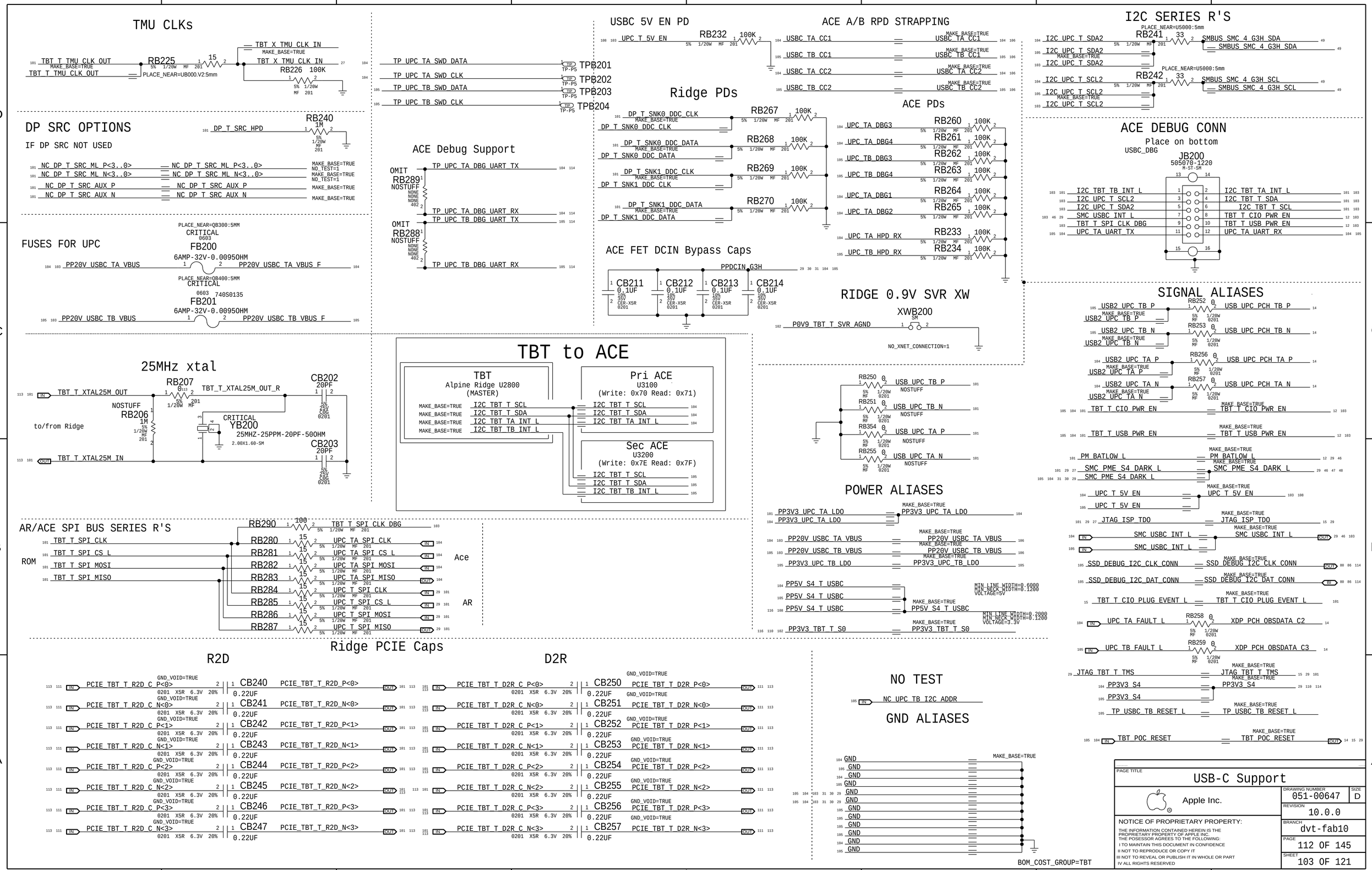

WWW.AliSaler.Com

PRIMARY ACE USB-C PORT CONTROLLER (UPC)

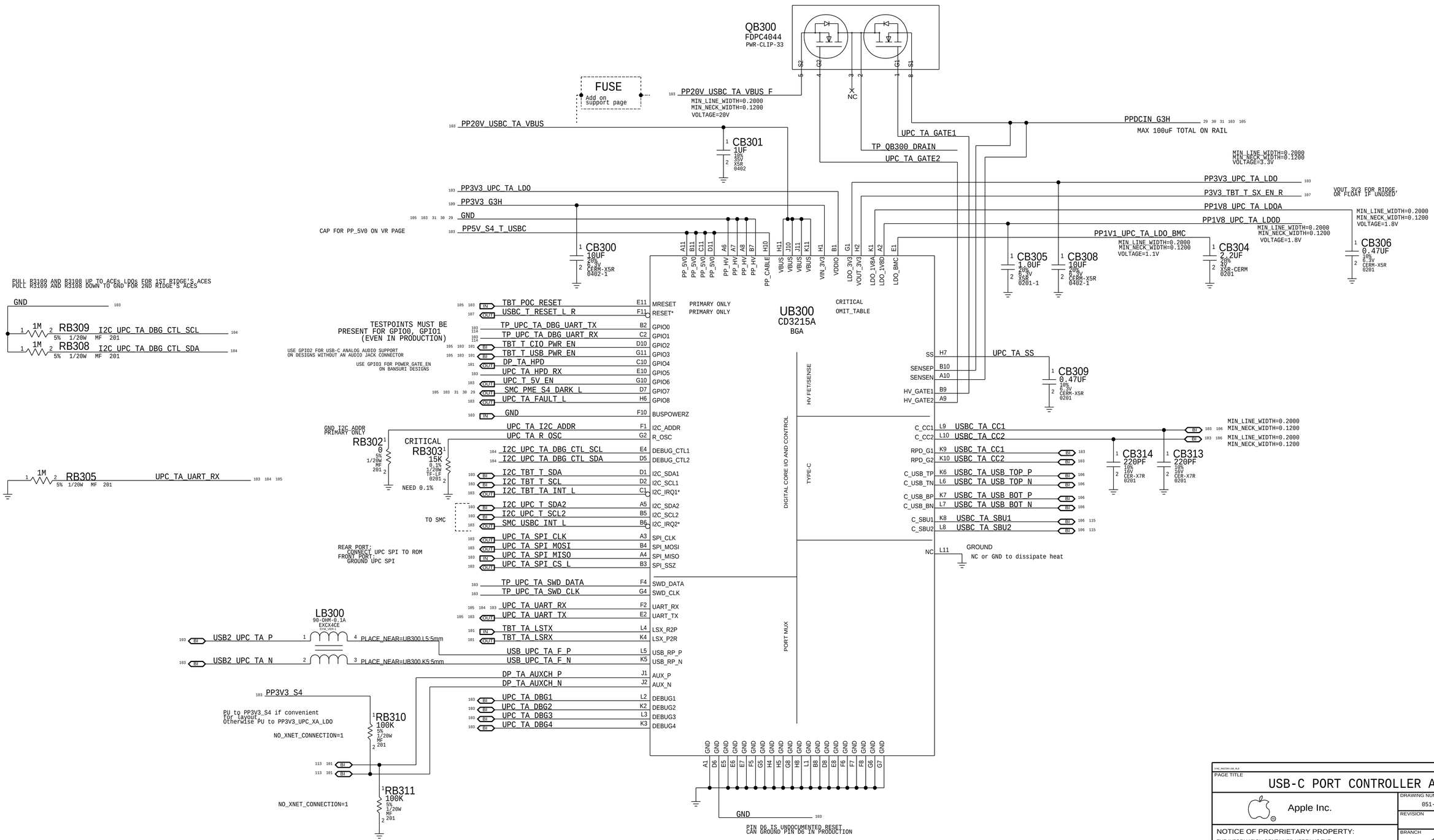

BOM_COST_GROUP=USB-C

PAGE TITLE
USB-C PORT CONTROLLER A

Apple Inc.

DRAWING NUMBER 051-00647
SIZE D
REVISION 10.0.0
BRANCH dvt-fab10
PAGE 113 OF 145
SHEET 104 OF 121

NOTICE OF PROPRIETARY PROPERTY:
THE INFORMATION CONTAINED HEREIN IS THE PROPRIETARY PROPERTY OF APPLE INC.
THE POSESSOR AGREES TO THE FOLLOWING:
I TO MAINTAIN THIS DOCUMENT IN CONFIDENCE
II NOT TO REPRODUCE OR COPY IT
III NOT TO REVEAL OR PUBLISH IT IN WHOLE OR PART
IV ALL RIGHTS RESERVED

WWW.AliSaler.Com

SECONDARY ACE USB-C PORT CONTROLLER (UPC)

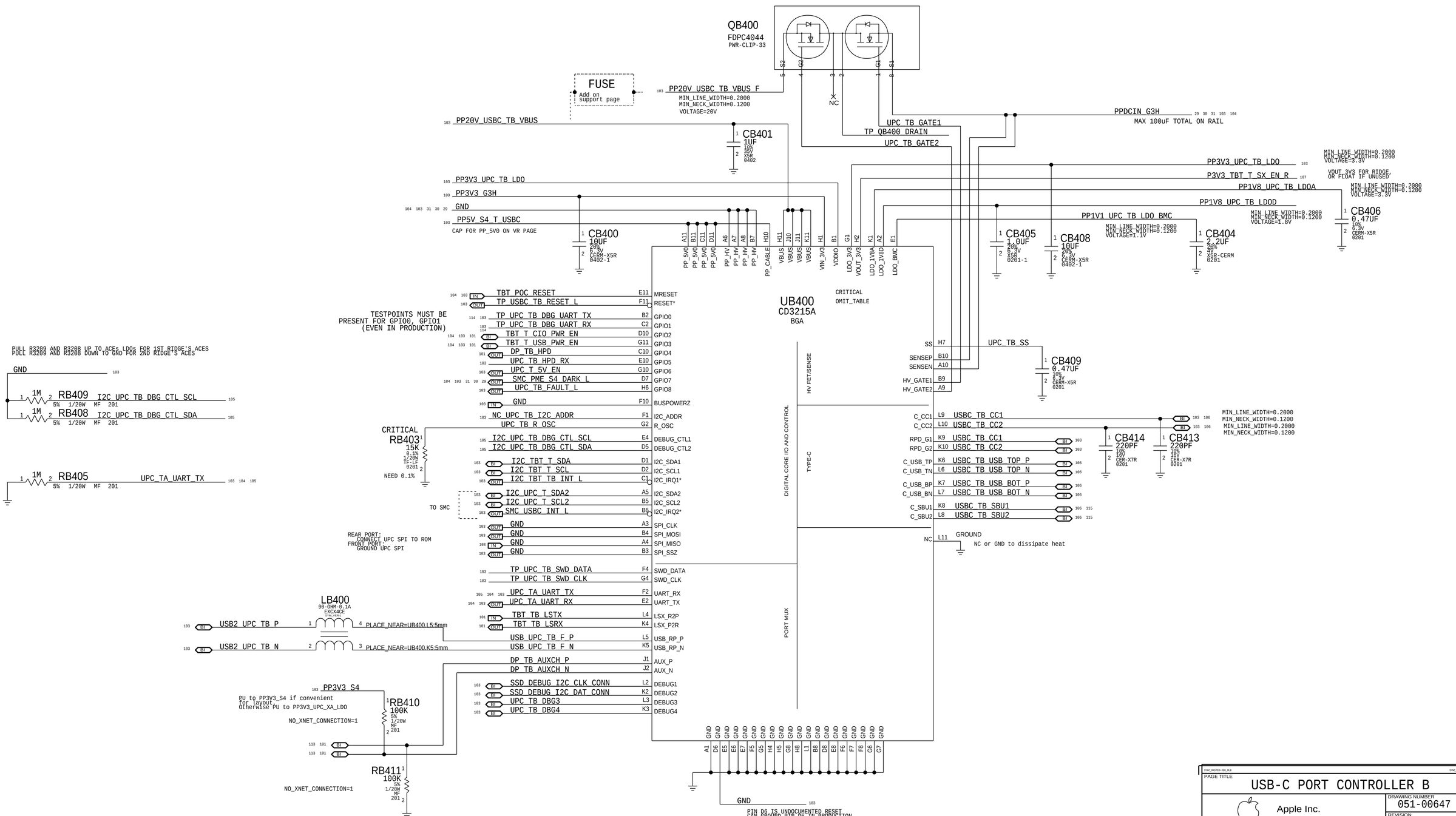

BOM_COST_GROUP=USB-C

PAGE TITLE	USB-C PORT CONTROLLER B
Apple Inc.	DRAWING NUMBER 051-00647 SIZE D
	REVISION 10.0.0
NOTICE OF PROPRIETARY PROPERTY: THE INFORMATION CONTAINED HEREIN IS THE PROPRIETARY PROPERTY OF APPLE INC. THE POSESSOR AGREES TO THE FOLLOWING: I TO MAINTAIN THIS DOCUMENT IN CONFIDENCE II NOT TO REPRODUCE OR COPY IT III NOT TO REVEAL OR PUBLISH IT IN WHOLE OR PART IV ALL RIGHTS RESERVED	BRANCH dvt-fab10
	PAGE 114 OF 145
	SHEET 105 OF 121

WWW.AliSaler.Com

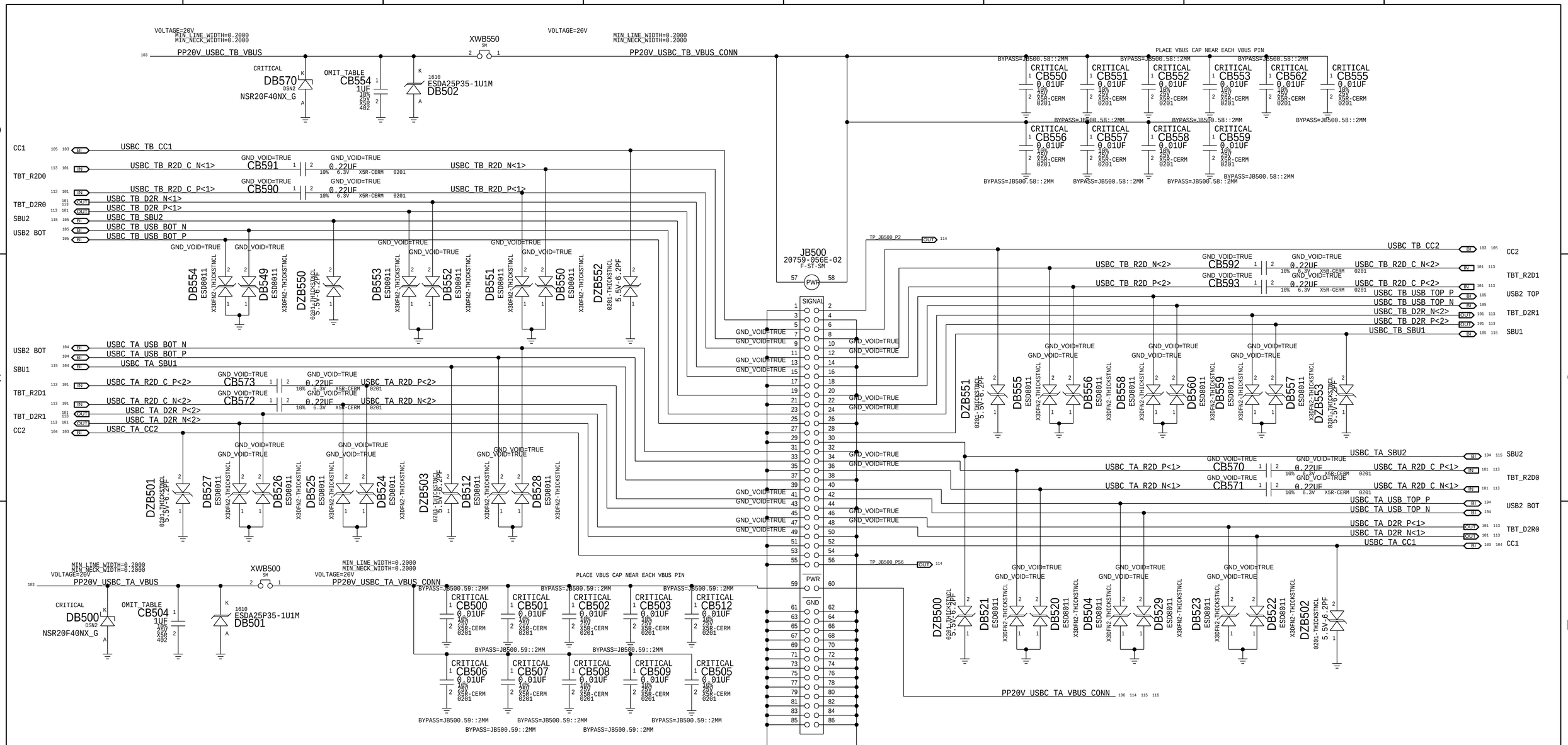

PART NUMBER	QTY	DESCRIPTION	REFERENCE DES	CRITICAL	BOM OPTION
138S0683	2	CAP,CER,X5R,1UF,10%,25V,0402	CB504, CB554	CRITICAL	NOSTUFF

BOM_COST_GROUP=USB-C

LAST CHANGE: Wed Apr 1 22:57:37 2015

PAGE TITLE
USB-C CONNECTOR A

Apple Inc.

DRAWING NUMBER 051-00647 SIZE D
REVISION 10.0.0
BRANCH dvt-fab10
PAGE 115 OF 145
SHEET 106 OF 121

NOTICE OF PROPRIETARY PROPERTY:
THE INFORMATION CONTAINED HEREIN IS THE PROPRIETARY PROPERTY OF APPLE INC.
THE POSESSOR AGREES TO THE FOLLOWING:
I TO MAINTAIN THIS DOCUMENT IN CONFIDENCE
II NOT TO REPRODUCE OR COPY IT
III NOT TO REVEAL OR PUBLISH IT IN WHOLE OR PART
IV ALL RIGHTS RESERVED

WWW.AliSaler.Com

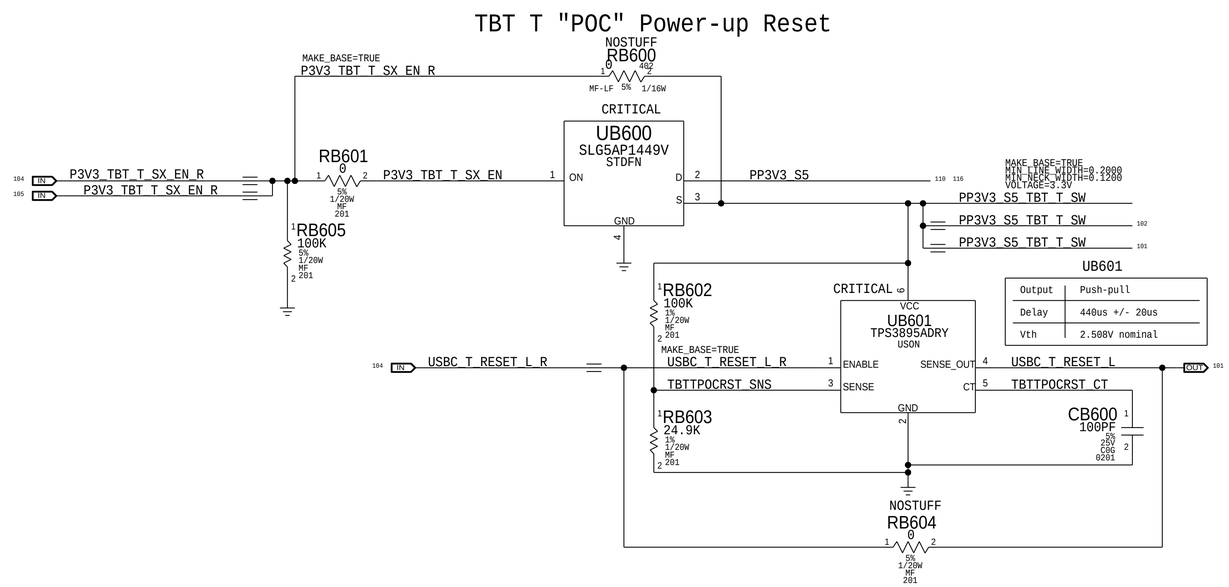

UB601

Output	Push-pull
Delay	440us +/- 20us
Vth	2.508V nominal

BOM_COST_GROUP=USB-C

DESIGN: j130/dev_mlb_u
LAST CHANGE: Wed Apr 1 22:57:37 2015

PAGE TITLE
USB-C CONNECTOR B

Apple Inc.

DRAWING NUMBER 051-00647 SIZE D
REVISION 10.0.0
BRANCH dvt-fab10
PAGE 116 OF 145
SHEET 107 OF 121

NOTICE OF PROPRIETARY PROPERTY:
THE INFORMATION CONTAINED HEREIN IS THE PROPRIETARY PROPERTY OF APPLE INC.
THE POSESSOR AGREES TO THE FOLLOWING:
I TO MAINTAIN THIS DOCUMENT IN CONFIDENCE
II NOT TO REPRODUCE OR COPY IT
III NOT TO REVEAL OR PUBLISH IT IN WHOLE OR PART
IV ALL RIGHTS RESERVED

WWW.AliSaler.Com

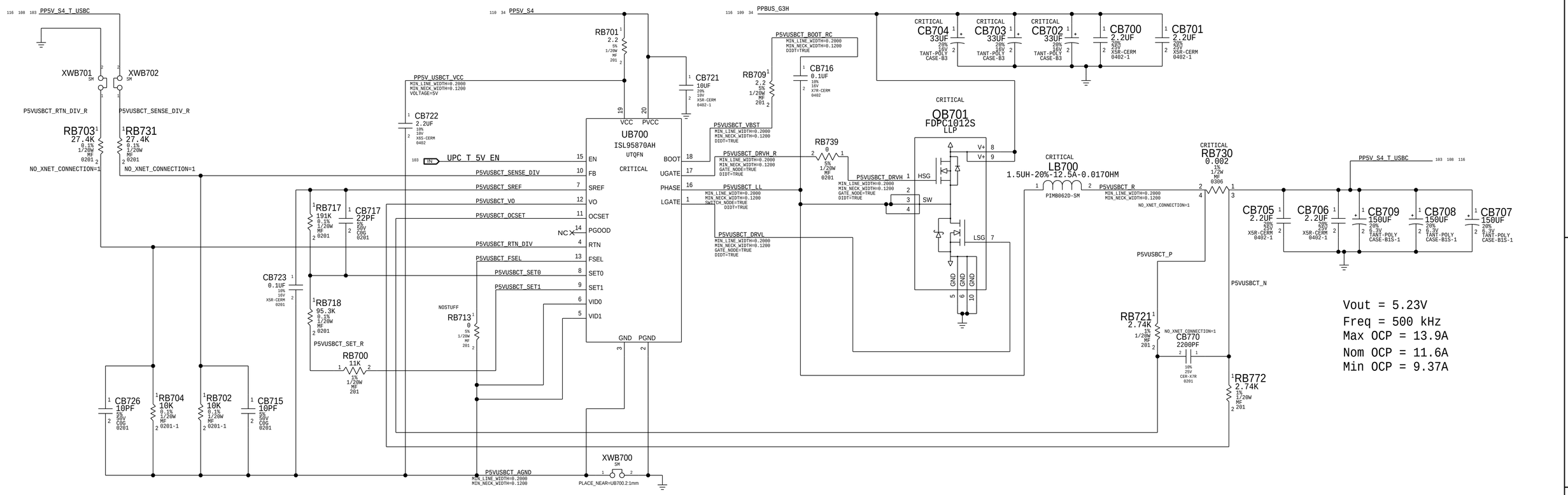

BOM_COST_GROUP=USB-C

PAGE TITLE
TBT 5V REGULATOR

Apple Inc.

DRAWING NUMBER	051-00647
SIZE	D
REVISION	10.0.0
BRANCH	dvt-fab10
PAGE	117 OF 145
SHEET	108 OF 121

NOTICE OF PROPRIETARY PROPERTY:
THE INFORMATION CONTAINED HEREIN IS THE PROPRIETARY PROPERTY OF APPLE INC.
THE POSESSOR AGREES TO THE FOLLOWING:
I TO MAINTAIN THIS DOCUMENT IN CONFIDENCE
II NOT TO REPRODUCE OR COPY IT
III NOT TO REVEAL OR PUBLISH IT IN WHOLE OR PART
IV ALL RIGHTS RESERVED

WWW.AliSaler.Com

PBUS Rails

116 64 PPBUS_G3H
- PPBUS_G3H — MIN_LINE_WIDTH=0.6000, MIN_NECK_WIDTH=0.1200, VOLTAGE=13.1V, MAKE_BASE=TRUE — 114
- PPBUS_G3H — 50
- PPBUS_G3H — 50
- PPBUS_G3H — 50
- PPBUS_G3H — 75
- PPBUS_G3H — 50
- PPBUS_G3H — 50
- PPBUS_G3H — 70
- PPBUS_G3H — 63
- PPBUS_G3H — 72
- PPBUS_G3H — 34 108 116
- PPBUS_G3H — 55
- PPBUS_G3H — 60 61
- PPBUS_G3H — 72

50 PPBUS_HS_CPU
- PPBUS_HS_CPU — MIN_LINE_WIDTH=0.6000, MIN_NECK_WIDTH=0.2000, VOLTAGE=13.1V, MAKE_BASE=TRUE — 117
- PPBUS_HS_CPU — 66
- PPBUS_HS_CPU — 67
- PPBUS_HS_CPU — 68
- PPBUS_HS_CPU — 71
- PPBUS_HS_CPU — 71
- PPBUS_HS_CPU — 65

55 PPBUS_HS_GPU
- PPBUS_HS_GPU — MIN_LINE_WIDTH=0.6000, MIN_NECK_WIDTH=0.1200, VOLTAGE=13.1V, MAKE_BASE=TRUE — 97
- PPBUS_HS_GPU — 94
- PPBUS_HS_GPU — 97
- PPBUS_HS_GPU — 94
- PPBUS_HS_GPU — 100

50 PPBUS_HS_OTH5V
- PPBUS_HS_OTH5V — MIN_LINE_WIDTH=0.6000, MIN_NECK_WIDTH=0.1200, VOLTAGE=13.1V, MAKE_BASE=TRUE
- PPBUS_HS_OTH5V — 69 117

117 50 PPBUS_HS_OTH3V3
- PPBUS_HS_OTH3V3 — MIN_LINE_WIDTH=0.6000, MIN_NECK_WIDTH=0.1200, VOLTAGE=13.1V, MAKE_BASE=TRUE
- PPBUS_HS_OTH3V3 — 69 117

50 PPBUS_S4_HS_TPAD
- PPBUS_S4_HS_TPAD — MIN_LINE_WIDTH=0.2000, MIN_NECK_WIDTH=0.1200, VOLTAGE=13.1V, MAKE_BASE=TRUE
- PPBUS_S4_HS_TPAD — 43

3V3 G3H Rails

63 PP3V3_G3H
- PP3V3_G3H — MIN_LINE_WIDTH=0.2000, MIN_NECK_WIDTH=0.1200, VOLTAGE=3.3V, MAKE_BASE=TRUE — 114
- PP3V3_G3H — 57
- PP3V3_G3H — 46 47 76
- PP3V3_G3H — 48
- PP3V3_G3H — 64
- PP3V3_G3H — 43 48
- PP3V3_G3H — 49
- PP3V3_G3H — 48
- PP3V3_G3H — 47
- PP3V3_G3H — 20
- PP3V3_G3H — 49
- PP3V3_G3H — 30
- PP3V3_G3H — 31
- PP3V3_G3H — 29
- PP3V3_G3H — 104
- PP3V3_G3H — 105

RTC Rails

70 PP3V0_G3H
- PP3V0_G3H — MIN_LINE_WIDTH=0.2000, MIN_NECK_WIDTH=0.1200, VOLTAGE=3.0V, MAKE_BASE=TRUE
- PP3V0_G3H — 12 16 17
- PP3V0_G3H — 70

IMVP Rails

66 PPVCC_S0_CPU
- PPVCC_S0_CPU — MIN_LINE_WIDTH=0.6000, MIN_NECK_WIDTH=0.1200, VOLTAGE=1.5V, MAKE_BASE=TRUE — 114
- PPVCC_S0_CPU — 6 8 55
- PPVCC_S0_CPU — 10

67 PPVCCSA_S0_CPU
- PPVCCSA_S0_CPU — MIN_LINE_WIDTH=0.6000, MIN_NECK_WIDTH=0.1200, VOLTAGE=1.15V, MAKE_BASE=TRUE
- PPVCCSA_S0_CPU — 8 53
- PPVCCSA_S0_CPU — 11

68 PPVCCGT_S0_CPU
- PPVCCGT_S0_CPU — MIN_LINE_WIDTH=0.2000, MIN_NECK_WIDTH=0.1200, VOLTAGE=1.5V, MAKE_BASE=TRUE
- PPVCCGT_S0_CPU — 8 55
- PPVCCGT_S0_CPU — 11 116

CPU VCCIO Rails

117 71 PPVCCIO_S0_CPU
- PPVCCIO_S0_CPU — MIN_LINE_WIDTH=0.6000, MIN_NECK_WIDTH=0.1200, VOLTAGE=0.95V, MAKE_BASE=TRUE — 10
- PPVCCIO_S0_CPU — 5 8

1V2 Rails

117 74 71 PP1V2_S3
- PP1V2_S3 — MIN_LINE_WIDTH=0.2000, MIN_NECK_WIDTH=0.1200, VOLTAGE=1.2V, MAKE_BASE=TRUE
- PP1V2_S3 — 22 23 24 25 116
- PP1V2_S3 — 71 117
- PP1V2_S3 — 21
- PP1V2_S3 — 22 23 24 25
- PP1V2_S3 — 22 23 24 25 116
- PP1V2_S3 — 51
- PP1V2_S3 — 74

51 PP1V2_S3_CPUDDR
- PP1V2_S3_CPUDDR — MIN_LINE_WIDTH=0.6000, MIN_NECK_WIDTH=0.1200, VOLTAGE=1.2V, MAKE_BASE=TRUE
- PP1V2_S3_CPUDDR — 8
- PP1V2_S3_CPUDDR — 10 116

74 PP1V2_S0SW
- PP1V2_S0SW — MIN_LINE_WIDTH=0.5000, MIN_NECK_WIDTH=0.1200, VOLTAGE=1.2V, MAKE_BASE=TRUE
- PP1V2_S0SW — 8

0V6 Rails

117 71 PP0V6_S0_DDRVTT
- PP0V6_S0_DDRVTT — MIN_LINE_WIDTH=0.2000, MIN_NECK_WIDTH=0.1200, VOLTAGE=0.6V, MAKE_BASE=TRUE
- PP0V6_S0_DDRVTT — 26 116
- PP0V6_S0_DDRVTT — 26 116

21 PP0V6_S3_MEM_VREFDQ_A — PP0V6_S3_MEM_VREFDQ_A — MAKE_BASE=TRUE, VOLTAGE=0.6V — 22 23

109 21 PP0V6_S3_MEM_VREFCA_A — PP0V6_S3_MEM_VREFCA_A — MAKE_BASE=TRUE, VOLTAGE=0.6V — 22 23

21 PP0V6_S3_MEM_VREFDQ_B — PP0V6_S3_MEM_VREFDQ_B — MAKE_BASE=TRUE, VOLTAGE=0.6V — 24 25

109 21 PP0V6_S3_MEM_VREFCA_A — PP0V6_S3_MEM_VREFCA_A — MAKE_BASE=TRUE, VOLTAGE=0.6V — 24 25

1V8 Rails

117 72 PP1V8_SUS
- PP1V8_SUS — MIN_LINE_WIDTH=0.2000, MIN_NECK_WIDTH=0.1200, VOLTAGE=1.8V, MAKE_BASE=TRUE
- PP1V8_SUS — 74
- PP1V8_SUS — 74
- PP1V8_SUS — 15 16 17

74 PP1V8_S4
- PP1V8_S4 — MIN_LINE_WIDTH=0.2000, MIN_NECK_WIDTH=0.1200, VOLTAGE=1.8V, MAKE_BASE=TRUE
- PP1V8_S4 — 38 42
- PP1V8_S4 — 20

74 PP1V8_S3
- PP1V8_S3 — MIN_LINE_WIDTH=0.2000, MIN_NECK_WIDTH=0.1200, VOLTAGE=1.8V, MAKE_BASE=TRUE
- PP1V8_S3 — 53
- PP1V8_S3 — 70

53 PP1V8_S3_MEM
- PP1V8_S3_MEM — MIN_LINE_WIDTH=0.6000, MIN_NECK_WIDTH=0.1200, VOLTAGE=1.8V, MAKE_BASE=TRUE
- PP1V8_S3_MEM — 22 23 24 25 116

74 PP1V8_S0
- PP1V8_S0 — MIN_LINE_WIDTH=0.5000, MIN_NECK_WIDTH=0.1200, VOLTAGE=1.8V, MAKE_BASE=TRUE — 61 114
- PP1V8_S0 — 16 17
- PP1V8_S0 — 58 60 61
- PP1V8_S0 — 37 38 42
- PP1V8_S0 — 73
- PP1V8_S0 — 19
- PP1V8_S0 — 37 42
- PP1V8_S0 — 37

PAGE TITLE: Power Aliases - 1

Apple Inc.

DRAWING NUMBER: 051-00647 | SIZE: D

REVISION: 10.0.0

BRANCH: dvt-fab10

PAGE: 120 OF 145

SHEET: 109 OF 121

NOTICE OF PROPRIETARY PROPERTY:
THE INFORMATION CONTAINED HEREIN IS THE PROPRIETARY PROPERTY OF APPLE INC.
THE POSESSOR AGREES TO THE FOLLOWING:
I TO MAINTAIN THIS DOCUMENT IN CONFIDENCE
II NOT TO REPRODUCE OR COPY IT
III NOT TO REVEAL OR PUBLISH IT IN WHOLE OR PART
IV ALL RIGHTS RESERVED

WWW.AliSaler.Com

1V0 Rails

117 72 PP1V0_SUS
PP1V0_SUS
MIN_LINE_WIDTH=0.2000
MIN_NECK_WIDTH=0.1200
VOLTAGE=1V
MAKE_BASE=TRUE
PP1V0_SUS 16 17
PP1V0_SUS 16 17
PP1V0_SUS 16
PP1V0_SUS 16
PP1V0_SUS 16
PP1V0_SUS 16
PP1V0_SUS 17
PP1V0_SUS 17
PP1V0_SUS 18
PP1V0_SUS 74
PP1V0_SUS 12
PP1V0_SUS 17
PP1V0_SUS 20
PP1V0_SUS 16 17

74 PP1V0_S3
PP1V0_S3
MIN_LINE_WIDTH=0.2000
MIN_NECK_WIDTH=0.1200
VOLTAGE=1V
MAKE_BASE=TRUE
PP1V0_S3 6 8 11
PP1V0_S3 65
PP1V0_S3 8 11
PP1V0_S3 74
PP1V0_S3 47

74 PP1V0_S0SW
PP1V0_S0SW
MIN_LINE_WIDTH=0.2000
MIN_NECK_WIDTH=0.1200
VOLTAGE=1V
MAKE_BASE=TRUE
PP1V0_S0SW 6 8 11 18

T208 Rails

51 PP3V3_S5_T139
PP3V3_S5_T139
MIN_LINE_WIDTH=0.2000
MIN_NECK_WIDTH=0.1200
VOLTAGE=3.3V
MAKE_BASE=TRUE
PP3V3_S5_T139 42

52 PP3V3_S4_SOC_PMU
PP3V3_S4_SOC_PMU
MIN_LINE_WIDTH=0.2000
MIN_NECK_WIDTH=0.1200
VOLTAGE=3.3V
MAKE_BASE=TRUE
PP3V3_S4_SOC_PMU 38 42
PP3V3_S4_SOC_PMU 40 41

52 PP5V_S0_T139
PP5V_S0_T139
MIN_LINE_WIDTH=0.2000
MIN_NECK_WIDTH=0.1200
VOLTAGE=5V
MAKE_BASE=TRUE
PP5V_S0_T139 42

5V Rails

69 PP5V_S5
PP5V_S5
MIN_LINE_WIDTH=0.2000
MIN_NECK_WIDTH=0.1200
VOLTAGE=5V
MAKE_BASE=TRUE

117 69 PP5V_S4
PP5V_S4
MIN_LINE_WIDTH=0.2000
MIN_NECK_WIDTH=0.1200
VOLTAGE=5V
MAKE_BASE=TRUE
PP5V_S4 43
PP5V_S4 51 53
PP5V_S4 74
PP5V_S4 34 108
PP5V_S4 65
PP5V_S4 73

117 74 PP5V_S0
PP5V_S0
MIN_LINE_WIDTH=0.6000
MIN_NECK_WIDTH=0.1200
VOLTAGE=5V
MAKE_BASE=TRUE
PP5V_S0 38 115
PP5V_S0 52
PP5V_S0 65 66 67
PP5V_S0 117
PP5V_S0 75
PP5V_S0 43 56 117
PP5V_S0 53
PP5V_S0 76
PP5V_S0 68
PP5V_S0 94
PP5V_S0 97
PP5V_S0 100

53 PP5V_S0_KBD
PP5V_S0_KBD
MIN_LINE_WIDTH=0.6000
MIN_NECK_WIDTH=0.2000
VOLTAGE=5V
MAKE_BASE=TRUE
PP5V_S0_KBD 114
PP5V_S0_KBD 43

3V3 Rails

117 69 PP3V3_S5
PP3V3_S5
MIN_LINE_WIDTH=0.6000
MIN_NECK_WIDTH=0.1200
VOLTAGE=3.3V
MAKE_BASE=TRUE
PP3V3_S5 115
PP3V3_S5 12 16 17
PP3V3_S5 74
PP3V3_S5 74
PP3V3_S5 74
PP3V3_S5 70
PP3V3_S5 117
PP3V3_S5 20
PP3V3_S5 74
PP3V3_S5 72
PP3V3_S5 19
PP3V3_S5 74
PP3V3_S5 74
PP3V3_S5 74
PP3V3_S5 74
PP3V3_S5 76
PP3V3_S5 51
PP3V3_S5 87
PP3V3_S5 100
PP3V3_S5 89
PP3V3_S5 74
PP3V3_S5 33 116
PP3V3_S5 107 116
PP3V3_S5 114

74 PP3V3_SUS
PP3V3_SUS
MIN_LINE_WIDTH=0.2000
MIN_NECK_WIDTH=0.1200
VOLTAGE=3.3V
MAKE_BASE=TRUE
PP3V3_SUS 57
PP3V3_SUS 12 14 16 17
PP3V3_SUS 16 17
PP3V3_SUS 16 17
PP3V3_SUS 12 15 16 17
PP3V3_SUS 13 16 17
PP3V3_SUS 16 17
PP3V3_SUS 15 16 17
PP3V3_SUS 70
PP3V3_SUS 18 73
PP3V3_SUS 74
PP3V3_SUS 70
PP3V3_SUS 43
PP3V3_SUS 114

117 74 PP3V3_S4
PP3V3_S4
MIN_LINE_WIDTH=0.2000
MIN_NECK_WIDTH=0.1200
VOLTAGE=3.3V
MAKE_BASE=TRUE
PP3V3_S4 29 103 114
PP3V3_S4 51
PP3V3_S4 51
PP3V3_S4 52
PP3V3_S4 43
PP3V3_S4 49
PP3V3_S4 12
PP3V3_S4 52
PP3V3_S4 35
PP3V3_S4 47 48
PP3V3_S4 52
PP3V3_S4 89

52 PP3V3_S4_T151
PP3V3_S4_T151
MAKE_BASE=TRUE
PP3V3_S4_T151 45

51 PP3V3_S4_BT
PP3V3_S4_BT
MIN_LINE_WIDTH=0.6000
MIN_NECK_WIDTH=0.1500
VOLTAGE=3.3V
MAKE_BASE=TRUE
PP3V3_S4_BT 35

51 PP3V3_S4_WLAN
PP3V3_S4_WLAN
MIN_LINE_WIDTH=0.6000
MIN_NECK_WIDTH=0.1800
VOLTAGE=3.3V
MAKE_BASE=TRUE
PP3V3_S4_WLAN 36

52 PP3V3_S4_TPAD
PP3V3_S4_TPAD
MIN_LINE_WIDTH=0.2000
MIN_NECK_WIDTH=0.1200
VOLTAGE=3.3V
MAKE_BASE=TRUE
PP3V3_S4_TPAD 43

74 PP3V3_S4SW_SNS
PP3V3_S4SW_SNS
MIN_LINE_WIDTH=0.2000
MIN_NECK_WIDTH=0.1200
VOLTAGE=3.3V
MAKE_BASE=TRUE
PP3V3_S4SW_SNS 50
PP3V3_S4SW_SNS 50 51 52 53 55

91 74 PP3V3_S0
PP3V3_S0
MIN_LINE_WIDTH=0.2000
MIN_NECK_WIDTH=0.1200
VOLTAGE=3.3V
MAKE_BASE=TRUE
PP3V3_S0 114
PP3V3_S0 53
PP3V3_S0 56
PP3V3_S0 54
PP3V3_S0 12 14 20 73
PP3V3_S0 49
PP3V3_S0 49
PP3V3_S0 49
PP3V3_S0 49
PP3V3_S0 52
PP3V3_S0 51
PP3V3_S0 51
PP3V3_S0 20
PP3V3_S0 54
PP3V3_S0 47
PP3V3_S0 76
PP3V3_S0 47
PP3V3_S0 59
PP3V3_S0 12 13 15
PP3V3_S0 52
PP3V3_S0 16 17
PP3V3_S0 100
PP3V3_S0 49 89 98
PP3V3_S0 89
PP3V3_S0 100
PP3V3_S0 43

91 74 PP3V3_S0_LEFT
PP3V3_S0_LEFT
MIN_LINE_WIDTH=0.2000
MIN_NECK_WIDTH=0.1200
VOLTAGE=3.3V
MAKE_BASE=TRUE
PP3V3_S0_LEFT 56
PP3V3_S0_LEFT 54
PP3V3_S0_LEFT 52
PP3V3_S0_LEFT 50
PP3V3_S0_LEFT 52
PP3V3_S0_LEFT 38 42
PP3V3_S0_LEFT 42
PP3V3_S0_LEFT 37
PP3V3_S0_LEFT 70
PP3V3_S0_LEFT 54

52 PP3V3_TBT_X_S0
PP3V3_TBT_X_S0 28 29 116

52 PP3V3_TBT_T_S0
PP3V3_TBT_T_S0 102 103 116

GPU Rails

97 PPVCORE_S0_GPU
PPVCORE_S0_GPU
MIN_LINE_WIDTH=0.2000
MIN_NECK_WIDTH=0.1200
VOLTAGE=1.8V
MAKE_BASE=TRUE
PPVCORE_S0_GPU 55 90 92

94 PPVDDCI_S0_GPU
PPVDDCI_S0_GPU
MIN_LINE_WIDTH=0.2000
MIN_NECK_WIDTH=0.1200
VOLTAGE=1.8V
MAKE_BASE=TRUE
PPVDDCI_S0_GPU 92
PPVDDCI_S0_GPU 99
PPVDDCI_S0_GPU 55 92

116 94 PP1V5R1V35_S0_GPU_MEM
PP1V5R1V35_S0_GPU_MEM
MIN_LINE_WIDTH=0.2000
MIN_NECK_WIDTH=0.1200
VOLTAGE=1.5V
MAKE_BASE=TRUE
PP1V5R1V35_S0_GPU_MEM 95 96
PP1V5R1V35_S0_GPU_MEM 55

55 PP1V5R1V35_S0_GPU_IC
PP1V5R1V35_S0_GPU_IC
MIN_LINE_WIDTH=0.2000
MIN_NECK_WIDTH=0.1200
VOLTAGE=1.5V
MAKE_BASE=TRUE
PP1V5R1V35_S0_GPU_IC 92

116 100 PP1V8_GPU
PP1V8_GPU
MIN_LINE_WIDTH=0.2000
MIN_NECK_WIDTH=0.1200
VOLTAGE=1.8V
MAKE_BASE=TRUE
PP1V8_GPU 55

116 55 PP1V8_S0_GPU
PP1V8_S0_GPU
MIN_LINE_WIDTH=0.2000
MIN_NECK_WIDTH=0.1200
VOLTAGE=1.8V
MAKE_BASE=TRUE
PP1V8_S0_GPU 91 99
PP1V8_S0_GPU 92
PP1V8_S0_GPU 99
PP1V8_S0_GPU 98
PP1V8_S0_GPU 97
PP1V8_S0_GPU 98

100 PP3V3_S0_GPU
PP3V3_S0_GPU
MIN_LINE_WIDTH=0.2000
MIN_NECK_WIDTH=0.1200
VOLTAGE=3.3V
MAKE_BASE=TRUE
PP3V3_S0_GPU 93 99
PP3V3_S0_GPU 92
PP3V3_S0_GPU 91
PP3V3_S0_GPU 98
PP3V3_S0_GPU 98
PP3V3_S0_GPU 99
PP3V3_S0_GPU 98
PP3V3_S0_GPU 90 94 97 99
PP3V3_S0_GPU 98

Digital Ground

GND
MIN_NECK_WIDTH=0.1000
MIN_LINE_WIDTH=0.1270

PAGE TITLE
Power Aliases - 2

Apple Inc.

DRAWING NUMBER 051-00647
SIZE D
REVISION 10.0.0
BRANCH dvt-fab10
PAGE 121 OF 145
SHEET 110 OF 121

NOTICE OF PROPRIETARY PROPERTY:
THE INFORMATION CONTAINED HEREIN IS THE PROPRIETARY PROPERTY OF APPLE INC.
THE POSESSOR AGREES TO THE FOLLOWING:
I TO MAINTAIN THIS DOCUMENT IN CONFIDENCE
II NOT TO REPRODUCE OR COPY IT
III NOT TO REVEAL OR PUBLISH IT IN WHOLE OR PART
IV ALL RIGHTS RESERVED

WWW.AliSaler.Com

SIGNAL ALIAS

NC ALIASES 2

NC_CLKOUT_PCIE_1_N	MAKE_BASE=TRUE	NC_CLKOUT_PCIE_1_N	MAKE_BASE=TRUE
NC_CLKOUT_PCIE_1_P	MAKE_BASE=TRUE	NC_CLKOUT_PCIE_1_P	MAKE_BASE=TRUE
NC_CLKOUT_PCIE_2_N	MAKE_BASE=TRUE	NC_CLKOUT_PCIE_2_N	MAKE_BASE=TRUE
NC_CLKOUT_PCIE_2_P	MAKE_BASE=TRUE	NC_CLKOUT_PCIE_2_P	MAKE_BASE=TRUE
NC_CLKOUT_PCIE_6_N	MAKE_BASE=TRUE	NC_CLKOUT_PCIE_6_N	MAKE_BASE=TRUE
NC_CLKOUT_PCIE_6_P	MAKE_BASE=TRUE	NC_CLKOUT_PCIE_6_P	MAKE_BASE=TRUE
NC_CLKOUT_PCIE_8_N	MAKE_BASE=TRUE	NC_CLKOUT_PCIE_8_N	MAKE_BASE=TRUE
NC_CLKOUT_PCIE_8_P	MAKE_BASE=TRUE	NC_CLKOUT_PCIE_8_P	MAKE_BASE=TRUE
NC_CLKOUT_PCIE_9_N	MAKE_BASE=TRUE	NC_CLKOUT_PCIE_9_N	MAKE_BASE=TRUE
NC_CLKOUT_PCIE_9_P	MAKE_BASE=TRUE	NC_CLKOUT_PCIE_9_P	MAKE_BASE=TRUE
NC_CLKOUT_PCIE_10_N	MAKE_BASE=TRUE	NC_CLKOUT_PCIE_10_N	MAKE_BASE=TRUE
NC_CLKOUT_PCIE_10_P	MAKE_BASE=TRUE	NC_CLKOUT_PCIE_10_P	MAKE_BASE=TRUE
NC_CLKOUT_PCIE_11_N	MAKE_BASE=TRUE	NC_CLKOUT_PCIE_11_N	MAKE_BASE=TRUE
NC_CLKOUT_PCIE_11_P	MAKE_BASE=TRUE	NC_CLKOUT_PCIE_11_P	MAKE_BASE=TRUE
NC_CLKOUT_PCIE_12_N	MAKE_BASE=TRUE	NC_CLKOUT_PCIE_12_N	MAKE_BASE=TRUE
NC_CLKOUT_PCIE_12_P	MAKE_BASE=TRUE	NC_CLKOUT_PCIE_12_P	MAKE_BASE=TRUE
NC_CLKOUT_PCIE_14_N	MAKE_BASE=TRUE	NC_CLKOUT_PCIE_14_N	MAKE_BASE=TRUE
NC_CLKOUT_PCIE_14_P	MAKE_BASE=TRUE	NC_CLKOUT_PCIE_14_P	MAKE_BASE=TRUE
NC_CLKOUT_PCIE_15_N	MAKE_BASE=TRUE	NC_CLKOUT_PCIE_15_N	MAKE_BASE=TRUE
NC_CLKOUT_PCIE_15_P	MAKE_BASE=TRUE	NC_CLKOUT_PCIE_15_P	MAKE_BASE=TRUE

NC_TP_PCH_GPP_G1	MAKE_BASE=TRUE	NC_TP_PCH_GPP_G1	MAKE_BASE=TRUE
NC_TP_PCH_GPP_G2	MAKE_BASE=TRUE	NC_TP_PCH_GPP_G2	MAKE_BASE=TRUE
NC_TP_PCH_GPP_G3	MAKE_BASE=TRUE	NC_TP_PCH_GPP_G3	MAKE_BASE=TRUE
NC_TP_PCH_GPP_G4	MAKE_BASE=TRUE	NC_TP_PCH_GPP_G4	MAKE_BASE=TRUE
NC_TP_PCH_GPP_G5	MAKE_BASE=TRUE	NC_TP_PCH_GPP_G5	MAKE_BASE=TRUE
NC_TP_PCH_GPP_G6	MAKE_BASE=TRUE	NC_TP_PCH_GPP_G6	MAKE_BASE=TRUE
NC_TP_PCH_GPP_G7	MAKE_BASE=TRUE	NC_TP_PCH_GPP_G7	MAKE_BASE=TRUE
NC_TP_PCH_GPP_G8	MAKE_BASE=TRUE	NC_TP_PCH_GPP_G8	MAKE_BASE=TRUE

NC_PCH_GPP_F15	MAKE_BASE=TRUE	NC_PCH_GPP_F15	MAKE_BASE=TRUE
NC_PCH_GPP_F16	MAKE_BASE=TRUE	NC_PCH_GPP_F16	MAKE_BASE=TRUE
NC_PCH_GPP_F17	MAKE_BASE=TRUE	NC_PCH_GPP_F17	MAKE_BASE=TRUE
NC_PCH_GPP_F18	MAKE_BASE=TRUE	NC_PCH_GPP_F18	MAKE_BASE=TRUE

GPU PEG Lanes

IN	PEG_GPU_D2R_P<7..0>	MAKE_BASE=TRUE	=PEG_D2R_P<7..0>	OUT
IN	PEG_GPU_D2R_N<7..0>	MAKE_BASE=TRUE	=PEG_D2R_N<7..0>	OUT
OUT	PEG_GPU_R2D_C_P<7..0>	MAKE_BASE=TRUE	=PEG_R2D_C_P<7..0>	IN
OUT	PEG_GPU_R2D_C_N<7..0>	MAKE_BASE=TRUE	=PEG_R2D_C_N<7..0>	IN

Thunderbolt Signals Through PEG

IN	PCIE_TBT_X_D2R_P<3..0>	MAKE_BASE=TRUE	=PEG_D2R_P<11..8>	OUT
IN	PCIE_TBT_X_D2R_N<3..0>	MAKE_BASE=TRUE	=PEG_D2R_N<11..8>	OUT
OUT	PCIE_TBT_X_R2D_C_P<3..0>	MAKE_BASE=TRUE	=PEG_R2D_C_P<11..8>	IN
OUT	PCIE_TBT_X_R2D_C_N<3..0>	MAKE_BASE=TRUE	=PEG_R2D_C_N<11..8>	IN
IN	PCIE_TBT_T_D2R_P<3..0>	MAKE_BASE=TRUE	=PEG_D2R_P<15..12>	OUT
IN	PCIE_TBT_T_D2R_N<3..0>	MAKE_BASE=TRUE	=PEG_D2R_N<15..12>	OUT
OUT	PCIE_TBT_T_R2D_C_P<3..0>	MAKE_BASE=TRUE	=PEG_R2D_C_P<15..12>	IN
OUT	PCIE_TBT_T_R2D_C_N<3..0>	MAKE_BASE=TRUE	=PEG_R2D_C_N<15..12>	IN

GPU ALIAS

EG_CLKREQ_OUT_L	MAKE_BASE=TRUE	EG_CLKREQ_OUT_L	MAKE_BASE=TRUE
EG_PEG_CLK100M_N	MAKE_BASE=TRUE	EG_PEG_CLK100M_N	MAKE_BASE=TRUE
EG_PEG_CLK100M_P	MAKE_BASE=TRUE	EG_PEG_CLK100M_P	MAKE_BASE=TRUE
EG_RESET_L		EG_RESET_L	

CPU Display Aliases

eDP conn		DPMUX	
EDP_INT_ML_P<3..0>	MAKE_BASE=TRUE	EDP_INT_ML_P<3..0>	
EDP_INT_ML_N<3..0>	MAKE_BASE=TRUE	EDP_INT_ML_N<3..0>	
EDP_AUXCH_C_P	MAKE_BASE=TRUE	EDP_AUXCH_C_P	
EDP_AUXCH_C_N	MAKE_BASE=TRUE	EDP_AUXCH_C_N	
NC_DDI1_ML_C_P<3..0>	MAKE_BASE=TRUE NO_TEST=1	NC_DDI1_ML_C_P<3..0>	
NC_DDI1_ML_C_N<3..0>	MAKE_BASE=TRUE NO_TEST=1	NC_DDI1_ML_C_N<3..0>	
NC_DDI1_AUXCH_C_P	MAKE_BASE=TRUE	NC_DDI1_AUXCH_C_P	
NC_DDI1_AUXCH_C_N	MAKE_BASE=TRUE	NC_DDI1_AUXCH_C_N	
NC_DDI2_ML_C_P<3..0>	MAKE_BASE=TRUE NO_TEST=1	NC_DDI2_ML_C_P<3..0>	
NC_DDI2_ML_C_N<3..0>	MAKE_BASE=TRUE NO_TEST=1	NC_DDI2_ML_C_N<3..0>	
NC_DDI2_AUXCH_C_P	MAKE_BASE=TRUE	NC_DDI2_AUXCH_C_P	
NC_DDI2_AUXCH_C_N	MAKE_BASE=TRUE	NC_DDI2_AUXCH_C_N	
NC_DDI3_ML_P<3..0>	MAKE_BASE=TRUE NO_TEST=1	NC_DDI3_ML_P<3..0>	
NC_DDI3_ML_N<3..0>	MAKE_BASE=TRUE NO_TEST=1	NC_DDI3_ML_N<3..0>	
NC_DDI3_AUXCH_P	MAKE_BASE=TRUE	NC_DDI3_AUXCH_P	
NC_DDI3_AUXCH_N	MAKE_BASE=TRUE	NC_DDI3_AUXCH_N	
DPMUX_UC_RX		DPMUX_UC_RX	
DPMUX_UC_TX	MAKE_BASE=TRUE	DPMUX_UC_TX	
NC_EDP_IG_BKLT_PWM	MAKE_BASE=TRUE	NC_EDP_IG_BKLT_PWM	MAKE_BASE=TRUE

EPD PANEL

I2C_BKLT_SCL	MAKE_BASE TRUE	I2C_BKLT_SCL	
I2C_BKLT_SDA	MAKE_BASE TRUE	I2C_BKLT_SDA	

UNUSED SIGNALS

NC_PCH_SLP_WLAN_L	MAKE_BASE=TRUE	NC_PCH_SLP_WLAN_L	
NC_SPI_CS1_L	MAKE_BASE=TRUE	NC_SPI_CS1_L	
NC_SPI_CS2_L	MAKE_BASE=TRUE	NC_SPI_CS2_L	

SYNC_MASTER=X363_SANXOC SYNC_DATE=01/13/2015

PAGE TITLE

Signal Aliases

Apple Inc.

DRAWING NUMBER	051-00647
SIZE	D
REVISION	10.0.0
BRANCH	dvt-fab10
PAGE	122 OF 145
SHEET	111 OF 121

NOTICE OF PROPRIETARY PROPERTY:
THE INFORMATION CONTAINED HEREIN IS THE PROPRIETARY PROPERTY OF APPLE INC.
THE POSESSOR AGREES TO THE FOLLOWING:
I TO MAINTAIN THIS DOCUMENT IN CONFIDENCE
II NOT TO REPRODUCE OR COPY IT
III NOT TO REVEAL OR PUBLISH IT IN WHOLE OR PART
IV ALL RIGHTS RESERVED

WWW.AliSaler.Com

Memory Bit/Byte Swizzle

LPDDR3 COMMAND/ADDRESS

BDW-H LPDDR3 NET	BIT SWIZZLE
MAKE_BASE=TRUE	
MEM_A_DQ<0>	MEM_A_DQ<0>
MEM_A_DQ<1>	MEM_A_DQ<1>
MEM_A_DQ<2>	MEM_A_DQ<2>
MEM_A_DQ<3>	MEM_A_DQ<3>
MEM_A_DQ<4>	MEM_A_DQ<4>
MEM_A_DQ<5>	MEM_A_DQ<5>
MEM_A_DQ<6>	MEM_A_DQ<6>
MEM_A_DQ<7>	MEM_A_DQ<7>
MEM_A_DQ<8>	MEM_A_DQ<8>
MEM_A_DQ<9>	MEM_A_DQ<9>
MEM_A_DQ<10>	MEM_A_DQ<10>
MEM_A_DQ<11>	MEM_A_DQ<11>
MEM_A_DQ<12>	MEM_A_DQ<12>
MEM_A_DQ<13>	MEM_A_DQ<13>
MEM_A_DQ<14>	MEM_A_DQ<14>
MEM_A_DQ<15>	MEM_A_DQ<15>
MEM_A_DQ<16>	MEM_A_DQ<16>
MEM_A_DQ<17>	MEM_A_DQ<17>
MEM_A_DQ<18>	MEM_A_DQ<18>
MEM_A_DQ<19>	MEM_A_DQ<19>
MEM_A_DQ<20>	MEM_A_DQ<20>
MEM_A_DQ<21>	MEM_A_DQ<21>
MEM_A_DQ<22>	MEM_A_DQ<22>
MEM_A_DQ<23>	MEM_A_DQ<23>
MEM_A_DQ<24>	MEM_A_DQ<24>
MEM_A_DQ<25>	MEM_A_DQ<25>
MEM_A_DQ<26>	MEM_A_DQ<26>
MEM_A_DQ<27>	MEM_A_DQ<27>
MEM_A_DQ<28>	MEM_A_DQ<28>
MEM_A_DQ<29>	MEM_A_DQ<29>
MEM_A_DQ<30>	MEM_A_DQ<30>
MEM_A_DQ<31>	MEM_A_DQ<31>
MEM_A_DQ<32>	MEM_A_DQ<32>
MEM_A_DQ<33>	MEM_A_DQ<33>
MEM_A_DQ<34>	MEM_A_DQ<34>
MEM_A_DQ<35>	MEM_A_DQ<35>
MEM_A_DQ<36>	MEM_A_DQ<36>
MEM_A_DQ<37>	MEM_A_DQ<37>
MEM_A_DQ<38>	MEM_A_DQ<38>
MEM_A_DQ<39>	MEM_A_DQ<39>
MEM_A_DQ<40>	MEM_A_DQ<40>
MEM_A_DQ<41>	MEM_A_DQ<41>
MEM_A_DQ<42>	MEM_A_DQ<42>
MEM_A_DQ<43>	MEM_A_DQ<43>
MEM_A_DQ<44>	MEM_A_DQ<44>
MEM_A_DQ<45>	MEM_A_DQ<45>
MEM_A_DQ<46>	MEM_A_DQ<46>
MEM_A_DQ<47>	MEM_A_DQ<47>
MEM_A_DQ<48>	MEM_A_DQ<48>
MEM_A_DQ<49>	MEM_A_DQ<49>
MEM_A_DQ<50>	MEM_A_DQ<50>
MEM_A_DQ<51>	MEM_A_DQ<51>
MEM_A_DQ<52>	MEM_A_DQ<52>
MEM_A_DQ<53>	MEM_A_DQ<53>
MEM_A_DQ<54>	MEM_A_DQ<54>
MEM_A_DQ<55>	MEM_A_DQ<55>
MEM_A_DQ<56>	MEM_A_DQ<56>
MEM_A_DQ<57>	MEM_A_DQ<57>
MEM_A_DQ<58>	MEM_A_DQ<58>
MEM_A_DQ<59>	MEM_A_DQ<59>
MEM_A_DQ<60>	MEM_A_DQ<60>
MEM_A_DQ<61>	MEM_A_DQ<61>
MEM_A_DQ<62>	MEM_A_DQ<62>
MEM_A_DQ<63>	MEM_A_DQ<63>

BDW-H LPDDR3 NET	BIT SWIZZLE
MAKE_BASE=TRUE	
MEM_B_DQ<0>	MEM_B_DQ<0>
MEM_B_DQ<1>	MEM_B_DQ<1>
MEM_B_DQ<2>	MEM_B_DQ<2>
MEM_B_DQ<3>	MEM_B_DQ<3>
MEM_B_DQ<4>	MEM_B_DQ<4>
MEM_B_DQ<5>	MEM_B_DQ<5>
MEM_B_DQ<6>	MEM_B_DQ<6>
MEM_B_DQ<7>	MEM_B_DQ<7>
MEM_B_DQ<8>	MEM_B_DQ<8>
MEM_B_DQ<9>	MEM_B_DQ<9>
MEM_B_DQ<10>	MEM_B_DQ<10>
MEM_B_DQ<11>	MEM_B_DQ<11>
MEM_B_DQ<12>	MEM_B_DQ<12>
MEM_B_DQ<13>	MEM_B_DQ<13>
MEM_B_DQ<14>	MEM_B_DQ<14>
MEM_B_DQ<15>	MEM_B_DQ<15>
MEM_B_DQ<16>	MEM_B_DQ<16>
MEM_B_DQ<17>	MEM_B_DQ<17>
MEM_B_DQ<18>	MEM_B_DQ<18>
MEM_B_DQ<19>	MEM_B_DQ<19>
MEM_B_DQ<20>	MEM_B_DQ<20>
MEM_B_DQ<21>	MEM_B_DQ<21>
MEM_B_DQ<22>	MEM_B_DQ<22>
MEM_B_DQ<23>	MEM_B_DQ<23>
MEM_B_DQ<24>	MEM_B_DQ<24>
MEM_B_DQ<25>	MEM_B_DQ<25>
MEM_B_DQ<26>	MEM_B_DQ<26>
MEM_B_DQ<27>	MEM_B_DQ<27>
MEM_B_DQ<28>	MEM_B_DQ<28>
MEM_B_DQ<29>	MEM_B_DQ<29>
MEM_B_DQ<30>	MEM_B_DQ<30>
MEM_B_DQ<31>	MEM_B_DQ<31>
MEM_B_DQ<32>	MEM_B_DQ<32>
MEM_B_DQ<33>	MEM_B_DQ<33>
MEM_B_DQ<34>	MEM_B_DQ<34>
MEM_B_DQ<35>	MEM_B_DQ<35>
MEM_B_DQ<36>	MEM_B_DQ<36>
MEM_B_DQ<37>	MEM_B_DQ<37>
MEM_B_DQ<38>	MEM_B_DQ<38>
MEM_B_DQ<39>	MEM_B_DQ<39>
MEM_B_DQ<40>	MEM_B_DQ<40>
MEM_B_DQ<41>	MEM_B_DQ<41>
MEM_B_DQ<42>	MEM_B_DQ<42>
MEM_B_DQ<43>	MEM_B_DQ<43>
MEM_B_DQ<44>	MEM_B_DQ<44>
MEM_B_DQ<45>	MEM_B_DQ<45>
MEM_B_DQ<46>	MEM_B_DQ<46>
MEM_B_DQ<47>	MEM_B_DQ<47>
MEM_B_DQ<48>	MEM_B_DQ<48>
MEM_B_DQ<49>	MEM_B_DQ<49>
MEM_B_DQ<50>	MEM_B_DQ<50>
MEM_B_DQ<51>	MEM_B_DQ<51>
MEM_B_DQ<52>	MEM_B_DQ<52>
MEM_B_DQ<53>	MEM_B_DQ<53>
MEM_B_DQ<54>	MEM_B_DQ<54>
MEM_B_DQ<55>	MEM_B_DQ<55>
MEM_B_DQ<56>	MEM_B_DQ<56>
MEM_B_DQ<57>	MEM_B_DQ<57>
MEM_B_DQ<58>	MEM_B_DQ<58>
MEM_B_DQ<59>	MEM_B_DQ<59>
MEM_B_DQ<60>	MEM_B_DQ<60>
MEM_B_DQ<61>	MEM_B_DQ<61>
MEM_B_DQ<62>	MEM_B_DQ<62>
MEM_B_DQ<63>	MEM_B_DQ<63>

MAKE_BASE		
TRUE	MEM_A_DQS_P<0>	MEM_A_DQS_P<0>
TRUE	MEM_A_DQS_N<0>	MEM_A_DQS_N<0>
TRUE	MEM_A_DQS_P<1>	MEM_A_DQS_P<1>
TRUE	MEM_A_DQS_N<1>	MEM_A_DQS_N<1>
TRUE	MEM_A_DQS_P<2>	MEM_A_DQS_P<2>
TRUE	MEM_A_DQS_N<2>	MEM_A_DQS_N<2>
TRUE	MEM_A_DQS_P<3>	MEM_A_DQS_P<3>
TRUE	MEM_A_DQS_N<3>	MEM_A_DQS_N<3>
TRUE	MEM_A_DQS_P<4>	MEM_A_DQS_P<4>
TRUE	MEM_A_DQS_N<4>	MEM_A_DQS_N<4>
TRUE	MEM_A_DQS_P<5>	MEM_A_DQS_P<5>
TRUE	MEM_A_DQS_N<5>	MEM_A_DQS_N<5>
TRUE	MEM_A_DQS_P<6>	MEM_A_DQS_P<6>
TRUE	MEM_A_DQS_N<6>	MEM_A_DQS_N<6>
TRUE	MEM_A_DQS_P<7>	MEM_A_DQS_P<7>
TRUE	MEM_A_DQS_N<7>	MEM_A_DQS_N<7>

MAKE_BASE		
TRUE	MEM_B_DQS_P<0>	MEM_B_DQS_P<0>
TRUE	MEM_B_DQS_N<0>	MEM_B_DQS_N<0>
TRUE	MEM_B_DQS_P<1>	MEM_B_DQS_P<1>
TRUE	MEM_B_DQS_N<1>	MEM_B_DQS_N<1>
TRUE	MEM_B_DQS_P<2>	MEM_B_DQS_P<2>
TRUE	MEM_B_DQS_N<2>	MEM_B_DQS_N<2>
TRUE	MEM_B_DQS_P<3>	MEM_B_DQS_P<3>
TRUE	MEM_B_DQS_N<3>	MEM_B_DQS_N<3>
TRUE	MEM_B_DQS_P<4>	MEM_B_DQS_P<4>
TRUE	MEM_B_DQS_N<4>	MEM_B_DQS_N<4>
TRUE	MEM_B_DQS_P<5>	MEM_B_DQS_P<5>
TRUE	MEM_B_DQS_N<5>	MEM_B_DQS_N<5>
TRUE	MEM_B_DQS_P<6>	MEM_B_DQS_P<6>
TRUE	MEM_B_DQS_N<6>	MEM_B_DQS_N<6>
TRUE	MEM_B_DQS_P<7>	MEM_B_DQS_P<7>
TRUE	MEM_B_DQS_N<7>	MEM_B_DQS_N<7>

SYNC_MASTER=J80_MLB SYNC_DATE=11/06/2015

PAGE TITLE
Memory Bit/Byte Swizzle

Apple Inc.

DRAWING NUMBER 051-00647
SIZE D
REVISION 10.0.0
BRANCH dvt-fab10
PAGE 123 OF 145
SHEET 112 OF 121

NOTICE OF PROPRIETARY PROPERTY:
THE INFORMATION CONTAINED HEREIN IS THE PROPRIETARY PROPERTY OF APPLE INC.
THE POSESSOR AGREES TO THE FOLLOWING:
I TO MAINTAIN THIS DOCUMENT IN CONFIDENCE
II NOT TO REPRODUCE OR COPY IT
III NOT TO REVEAL OR PUBLISH IT IN WHOLE OR PART
IV ALL RIGHTS RESERVED

WWW.AliSaler.Com

High Speed NO_TEST

DMI

13 5	IN	DMI_S2N_P<3..0>	NO_TEST=1
13 5	IN	DMI_S2N_N<3..0>	NO_TEST=1
13 5	IN	DMI_N2S_P<3..0>	NO_TEST=1
13 5	IN	DMI_N2S_N<3..0>	NO_TEST=1

DP - CPU/ACE

99 27	IN	DP_X_SNK0_ML_C_N<3..0>	NO_TEST=1
99 27	IN	DP_X_SNK0_ML_C_P<3..0>	NO_TEST=1
27	IN	DP_X_SNK0_ML_N<3..0>	NO_TEST=1
27	IN	DP_X_SNK0_ML_P<3..0>	NO_TEST=1
99 27	IN	DP_X_SNK1_ML_C_N<3..0>	NO_TEST=1
99 27	IN	DP_X_SNK1_ML_C_P<3..0>	NO_TEST=1
27	IN	DP_X_SNK1_ML_N<3..0>	NO_TEST=1
27	IN	DP_X_SNK1_ML_P<3..0>	NO_TEST=1
101 99	IN	DP_T_SNK0_ML_C_N<3..0>	NO_TEST=1
101 99	IN	DP_T_SNK0_ML_C_P<3..0>	NO_TEST=1
101	IN	DP_T_SNK0_ML_N<3..0>	NO_TEST=1
101	IN	DP_T_SNK0_ML_P<3..0>	NO_TEST=1
101 99	IN	DP_T_SNK1_ML_C_N<3..0>	NO_TEST=1
101 99	IN	DP_T_SNK1_ML_C_P<3..0>	NO_TEST=1
101	IN	DP_T_SNK1_ML_N<3..0>	NO_TEST=1
101	IN	DP_T_SNK1_ML_P<3..0>	NO_TEST=1
99 27	IN	DP_X_SNK0_AUXCH_C_P	NO_TEST=1
99 27	IN	DP_X_SNK0_AUXCH_C_N	NO_TEST=1
101 99	IN	DP_T_SNK0_AUXCH_C_P	NO_TEST=1
101 99	IN	DP_T_SNK0_AUXCH_C_N	NO_TEST=1
27	IN	DP_X_SNK0_AUXCH_P	NO_TEST=1
27	IN	DP_X_SNK0_AUXCH_N	NO_TEST=1
101	IN	DP_T_SNK0_AUXCH_P	NO_TEST=1
101	IN	DP_T_SNK0_AUXCH_N	NO_TEST=1
99 27	IN	DP_X_SNK1_AUXCH_C_P	NO_TEST=1
99 27	IN	DP_X_SNK1_AUXCH_C_N	NO_TEST=1
101 99	IN	DP_T_SNK1_AUXCH_C_P	NO_TEST=1
101 99	IN	DP_T_SNK1_AUXCH_C_N	NO_TEST=1
27	IN	DP_X_SNK1_AUXCH_P	NO_TEST=1
27	IN	DP_X_SNK1_AUXCH_N	NO_TEST=1
101	IN	DP_T_SNK1_AUXCH_P	NO_TEST=1
101	IN	DP_T_SNK1_AUXCH_N	NO_TEST=1

CPU/EDP

111 76	IN	EDP_AUXCH_C_N	
111 76	IN	EDP_AUXCH_C_P	

PCH/AR

35 14	IN	PCIE_AP_D2R_P	NO_TEST=1
35 14	IN	PCIE_AP_D2R_N	NO_TEST=1
35	IN	PCIE_AP_R2D_P	NO_TEST=1
35	IN	PCIE_AP_R2D_N	NO_TEST=1
35 14	IN	PCIE_AP_R2D_C_P	NO_TEST=1
35 14	IN	PCIE_AP_R2D_C_N	NO_TEST=1

PCH/SSD

87 77 14	IN	PCIE_SSD_D2R_N<3..0>	NO_TEST=1
87 77 14	IN	PCIE_SSD_D2R_P<3..0>	NO_TEST=1
113 77	IN	PCIE_SSD_R2D_N<3..0>	NO_TEST=1
113 77	IN	PCIE_SSD_R2D_P<3..0>	NO_TEST=1
77	IN	PCIE_SSD_D2R_C_N<3..0>	NO_TEST=1
113 87 77 14	IN	PCIE_SSD_R2D_C_N<3..0>	NO_TEST=1
14	IN	PCIE_SSD_D2R_N<0>	NO_TEST=1
14	IN	PCIE_SSD_D2R_P<0>	NO_TEST=1
77	IN	PCIE_SSD_D2R_C_P<3..0>	NO_TEST=1
113 87 77 14	IN	PCIE_SSD_R2D_C_N<3..0>	NO_TEST=1
87 77	IN	PCIE_SSD_D2R_LB_P<0>	
87 77	IN	PCIE_SSD_R2D_LB_N<0>	
14	IN	PCIE_SSD_D2R_P<3>	NO_TEST=1
87 77	IN	PCIE_SSD_D2R_LB_N<0>	
14	IN	PCIE_SSD_D2R_N<3>	NO_TEST=1
87 77	IN	PCIE_SSD_R2D_LB_P<0>	

USB-C X

32 27	IN	USBC_XB_D2R_N<2..1>	NO_TEST=1
32 27	IN	USBC_XB_D2R_P<2..1>	NO_TEST=1
32 27	IN	USBC_XA_D2R_P<2..1>	NO_TEST=1
32 27	IN	USBC_XB_R2D_C_P<2..1>	NO_TEST=1
30 27	IN	DP_XA_AUXCH_P	NO_TEST=1
32 27	IN	USBC_XA_D2R_N<2..1>	NO_TEST=1
32 27	IN	USBC_XB_R2D_C_N<2..1>	NO_TEST=1
32 27	IN	USBC_XA_R2D_C_P<2..1>	NO_TEST=1
31 27	IN	DP_XB_AUXCH_P	NO_TEST=1
32 27	IN	USBC_XA_R2D_C_N<2..1>	NO_TEST=1
31 27	IN	DP_XB_AUXCH_N	NO_TEST=1
30 27	IN	DP_XA_AUXCH_N	NO_TEST=1
27	IN	DP_XA_AUXCH_C_N	NO_TEST=1
27	IN	DP_XA_AUXCH_C_P	NO_TEST=1
27	IN	DP_XB_AUXCH_C_P	NO_TEST=1
27	IN	DP_XB_AUXCH_C_N	NO_TEST=1

PEG

111 91	IN	PEG_GPU_D2R_N<7..0>	NO_TEST=1
111 91	IN	PEG_GPU_D2R_P<7..0>	NO_TEST=1
111 91	IN	PEG_GPU_R2D_C_N<7..0>	NO_TEST=1
111 91	IN	PEG_GPU_R2D_C_P<7..0>	NO_TEST=1
111 29	IN	PCIE_TBT_X_D2R_P<3..0>	NO_TEST=1
111 29	IN	PCIE_TBT_X_D2R_N<3..0>	NO_TEST=1
111 29	IN	PCIE_TBT_X_R2D_C_P<3..0>	NO_TEST=1
111 29	IN	PCIE_TBT_X_R2D_C_N<3..0>	NO_TEST=1
111 103	IN	PCIE_TBT_T_D2R_P<3..0>	NO_TEST=1
111 103	IN	PCIE_TBT_T_D2R_N<3..0>	NO_TEST=1
103 101	IN	PCIE_TBT_T_D2R_C_P<3..0>	NO_TEST=1
103 101	IN	PCIE_TBT_T_D2R_C_N<3..0>	NO_TEST=1
29 27	IN	PCIE_TBT_X_D2R_C_P<3..0>	NO_TEST=1
29 27	IN	PCIE_TBT_X_D2R_C_N<3..0>	NO_TEST=1
29 27	IN	PCIE_TBT_X_R2D_P<3..0>	NO_TEST=1
29 27	IN	PCIE_TBT_X_R2D_N<3..0>	NO_TEST=1
103 101	IN	PCIE_TBT_T_R2D_P<3..0>	NO_TEST=1
103 101	IN	PCIE_TBT_T_R2D_N<3..0>	NO_TEST=1
111 103	IN	PCIE_TBT_T_R2D_C_P<3..0>	NO_TEST=1
111 103	IN	PCIE_TBT_T_R2D_C_N<3..0>	NO_TEST=1
91	IN	PEG_GPU_D2R_C_N<7..0>	NO_TEST=1
91	IN	PEG_GPU_D2R_C_P<7..0>	NO_TEST=1
91	IN	PEG_GPU_R2D_N<7..0>	NO_TEST=1
91	IN	PEG_GPU_R2D_P<7..0>	NO_TEST=1

PCH/DFR

38 14	IN	USB_CAMERA_DFR_N	
38 14	IN	USB_CAMERA_DFR_P	

BAFFIN FRAME BUFFER

95 93	IN	FB_A1_CS_L	NO_TEST=1
95 93	IN	FB_A0_CKE_L	NO_TEST=1
95 93	IN	FB_A1_CKE_L	NO_TEST=1
95 93	IN	FB_A0_WE_L	NO_TEST=1
95 93	IN	FB_A1_WE_L	NO_TEST=1
96 93	IN	FB_B1_CS_L	NO_TEST=1
96 93	IN	FB_B0_CKE_L	NO_TEST=1
96 93	IN	FB_B1_CKE_L	NO_TEST=1
113 96 93	IN	FB_B0_WE_L	NO_TEST=1
113 96 93	IN	FB_B0_WE_L	NO_TEST=1
96 93	IN	FB_B0_CLK_P	NO_TEST=1
96 93	IN	FB_B1_CLK_N	NO_TEST=1
96 93	IN	FB_B1_CLK_P	NO_TEST=1
96 93	IN	FB_B0_RAS_L	NO_TEST=1
96 93	IN	FB_B1_RAS_L	NO_TEST=1
96 93	IN	FB_B0_CAS_L	NO_TEST=1
96 93	IN	FB_B1_CAS_L	NO_TEST=1
96 93	IN	FB_B0_CS_L	NO_TEST=1
95 93	IN	FB_A0_DQ<31..0>	NO_TEST=1
95 93	IN	FB_A1_DQ<31..0>	NO_TEST=1
95 93	IN	FB_A0_A<8..0>	NO_TEST=1
95 93	IN	FB_A1_A<8..0>	NO_TEST=1
95 93	IN	FB_A0_WCLK_N<1..0>	NO_TEST=1
95 93	IN	FB_A0_WCLK_P<1..0>	NO_TEST=1
95 93	IN	FB_A1_WCLK_N<1..0>	NO_TEST=1
95 93	IN	FB_A1_WCLK_P<1..0>	NO_TEST=1
95 93	IN	FB_A0_EDC<3..0>	NO_TEST=1
95 93	IN	FB_A1_EDC<3..0>	NO_TEST=1
95 93	IN	FB_A0_DBI_L<3..0>	NO_TEST=1
95 93	IN	FB_A1_DBI_L<3..0>	NO_TEST=1
95 93	IN	FB_A0_ABI_L	NO_TEST=1
95 93	IN	FB_A1_ABI_L	NO_TEST=1
95 93	IN	FB_A0_CLK_N	NO_TEST=1
95 93	IN	FB_A0_CLK_P	NO_TEST=1
95 93	IN	FB_A1_CLK_N	NO_TEST=1
95 93	IN	FB_A1_CLK_P	NO_TEST=1
95 93	IN	FB_A0_RAS_L	NO_TEST=1
95 93	IN	FB_A1_RAS_L	NO_TEST=1
95 93	IN	FB_A0_CAS_L	NO_TEST=1
95 93	IN	FB_A1_CAS_L	NO_TEST=1
95 93	IN	FB_A0_CS_L	NO_TEST=1
96 93	IN	FB_B0_CLK_N	NO_TEST=1
96 93	IN	FB_B0_DQ<31..0>	NO_TEST=1
96 93	IN	FB_B1_DQ<31..0>	NO_TEST=1
96 93	IN	FB_B0_A<8..0>	NO_TEST=1
96 93	IN	FB_B1_A<8..0>	NO_TEST=1
96 93	IN	FB_B0_WCLK_N<1..0>	NO_TEST=1
96 93	IN	FB_B0_WCLK_P<1..0>	NO_TEST=1
96 93	IN	FB_B1_WCLK_N<1..0>	NO_TEST=1
96 93	IN	FB_B1_WCLK_P<1..0>	NO_TEST=1
96 93	IN	FB_B0_EDC<3..0>	NO_TEST=1
96 93	IN	FB_B1_EDC<3..0>	NO_TEST=1
96 93	IN	FB_B0_DBI_L<3..0>	NO_TEST=1
96 93	IN	FB_B1_DBI_L<3..0>	NO_TEST=1
96 93	IN	FB_B0_ABI_L	NO_TEST=1
96 93	IN	FB_B1_ABI_L	NO_TEST=1

CPU/PCH CLK

12 6	IN	CPU_CLK24M_NSSC_CLK_N	NO_TEST=1
12 6	IN	CPU_CLK24M_NSSC_CLK_P	NO_TEST=1
12 6	IN	CPU_CLK100M_PCIBCLK_N	NO_TEST=1
12 6	IN	CPU_CLK100M_PCIBCLK_P	NO_TEST=1
12 6	IN	CPU_CLK100M_BCLK_N	NO_TEST=1
12 6	IN	CPU_CLK100M_BCLK_P	NO_TEST=1
87 12	IN	PCIE_CLK100M_SSD_N	NO_TEST=1
87 12	IN	PCIE_CLK100M_SSD_P	NO_TEST=1
87 77	IN	PCIE_CLK100M_SSD_LB_N	NO_TEST=1
87 77	IN	PCIE_CLK100M_SSD_LB_P	NO_TEST=1
115 18 12	IN	NC_ITPXDP_CLK100MN	NO_TEST=1
115 18 12	IN	NC_ITPXDP_CLK100MP	NO_TEST=1
35 12	IN	PCIE_CLK100M_AP_P	NO_TEST=1
35 12	IN	PCIE_CLK100M_AP_N	NO_TEST=1

MUX

89 5	IN	DP_INT_IG_ML_N<3..0>	NO_TEST=1
89 5	IN	DP_INT_IG_ML_P<3..0>	NO_TEST=1
89 5	IN	DP_INT_IG_AUX_N	NO_TEST=1
89 5	IN	DP_INT_IG_AUX_P	NO_TEST=1
99 89	IN	DP_INT_EG_ML_N<3..0>	NO_TEST=1
99 89	IN	DP_INT_EG_ML_P<3..0>	NO_TEST=1
99 89	IN	DP_INT_EG_AUX_N	NO_TEST=1
99 89	IN	DP_INT_EG_AUX_P	NO_TEST=1

DP MUX CRYSTAL

89	IN	DPMUX_UC_XTAL	NO_TEST=1
89	IN	DPMUX_UC_EXTAL	NO_TEST=1
89	IN	DPMUX_UC_EXTAL_R	NO_TEST=1
89	IN	DPMUX_UC_XTAL_R	NO_TEST=1

XTAL

	IN	GPU_XTAL_PU_OR_CAP	NO_TEST=1
	IN	NC_PCH_CLK24M_XTALOUT	NO_TEST=1
19	IN	SYSCLK_CLK24M_X2	NO_TEST=1
19	IN	SYSCLK_CLK24M_X2_R	NO_TEST=1
19	IN	SYSCLK_CLK24M_X1	NO_TEST=1
29 27	IN	TBT_X_XTAL25M_OUT	NO_TEST=1
29	IN	TBT_X_XTAL25M_OUT_R	NO_TEST=1
29 27	IN	TBT_X_XTAL25M_IN	NO_TEST=1
103 101	IN	TBT_T_XTAL25M_OUT	NO_TEST=1
103	IN	TBT_T_XTAL25M_OUT_R	NO_TEST=1
38	IN	SOC_XTAL_24M_O	NO_TEST=1
103 101	IN	TBT_T_XTAL25M_IN	NO_TEST=1
38	IN	SOC_XTAL_24M_I	NO_TEST=1
38	IN	SOC_XTAL_24M_O_R	NO_TEST=1
77	IN	SSD_CLKIN	NO_TEST=1
77	IN	SSD_CLKOUT	NO_TEST=1
77	IN	SSD_CLKOUT_R	NO_TEST=1
99 98	IN	GPU_XTAL_OUT	NO_TEST=1
99 98	IN	GPU_XTAL_OR_CLK_IN	NO_TEST=1
98	IN	GPU_XTAL_XTAL_OR_CLK	NO_TEST=1

MEM

26 22 7	IN	MEM_A_CAA<9..0>	NO_TEST=1
26 23 22 7	IN	MEM_A_CLK_P<1..0>	NO_TEST=1
26 23 22 7	IN	MEM_A_CLK_N<1..0>	NO_TEST=1
112 7	IN	MEM_A_DQ<63..0>	NO_TEST=1
112 7	IN	MEM_B_DQ<63..0>	NO_TEST=1
112 7	IN	MEM_A_DQS_P<7..0>	NO_TEST=1
112 7	IN	MEM_A_DQS_N<7..0>	NO_TEST=1
112 7	IN	MEM_B_DQS_P<7..0>	NO_TEST=1
112 7	IN	MEM_B_DQS_N<7..0>	NO_TEST=1
26 23 7	IN	MEM_A_CAB<9..0>	NO_TEST=1
26 24 7	IN	MEM_B_CAA<9..0>	NO_TEST=1
26 25 7	IN	MEM_B_CAB<9..0>	NO_TEST=1
26 25 24 7	IN	MEM_B_CLK_P<1..0>	NO_TEST=1
26 25 24 7	IN	MEM_B_CLK_N<1..0>	NO_TEST=1

WIFI

36	IN	50_0_ANT	NO_TEST=1
36	IN	50_1_ANT	NO_TEST=1
36	IN	50_2_ANT	NO_TEST=1
36	IN	50_0_COM	NO_TEST=1
36	IN	50_1_COM	NO_TEST=1
36	IN	50_2_COM	NO_TEST=1
36	IN	50_A_0_DIPLEXER	NO_TEST=1
36 35	IN	50_A_0_MATCH	NO_TEST=1
36	IN	50_G_0_DIPLEXER	NO_TEST=1
36 35	IN	50_G_0_MATCH	NO_TEST=1
36	IN	50_A_1_DIPLEXER	NO_TEST=1
36 35	IN	50_A_1_MATCH	NO_TEST=1
36	IN	50_G_1_DIPLEXER	NO_TEST=1
36 35	IN	50_G_1_MATCH	NO_TEST=1
36	IN	50_A_2_DIPLEXER	NO_TEST=1
36 35	IN	50_A_2_MATCH	NO_TEST=1
36	IN	50_G_2_DIPLEXER	NO_TEST=1
36 35	IN	50_G_2_MATCH	NO_TEST=1

USB-C T

106 101	IN	USBC_TA_D2R_P<2..1>	NO_TEST=1
106 101	IN	USBC_TA_D2R_N<2..1>	NO_TEST=1
106 101	IN	USBC_TA_R2D_C_P<2..1>	NO_TEST=1
106 101	IN	USBC_TA_R2D_C_N<2..1>	NO_TEST=1
104 101	IN	DP_TA_AUXCH_P	NO_TEST=1
104 101	IN	DP_TA_AUXCH_N	NO_TEST=1
101	IN	DP_TA_AUXCH_C_P	NO_TEST=1
101	IN	DP_TA_AUXCH_C_N	NO_TEST=1
106 101	IN	USBC_TB_D2R_P<2..1>	NO_TEST=1
106 101	IN	USBC_TB_D2R_N<2..1>	NO_TEST=1
106 101	IN	USBC_TB_R2D_C_P<2..1>	NO_TEST=1
106 101	IN	USBC_TB_R2D_C_N<2..1>	NO_TEST=1
105 101	IN	DP_TB_AUXCH_P	NO_TEST=1
105 101	IN	DP_TB_AUXCH_N	NO_TEST=1
101	IN	DP_TB_AUXCH_C_P	NO_TEST=1
101	IN	DP_TB_AUXCH_C_N	NO_TEST=1
85 83	IN	SSD_NAND_FH_DQ4	NO_TEST=1
85 83	IN	SSD_NAND_FH_DQ0	NO_TEST=1
85 83	IN	SSD_NAND_FH_DQS_P	NO_TEST=1
85 83	IN	SSD_NAND_FH_DQ5	NO_TEST=1
85 83	IN	SSD_NAND_FH_DQ6	NO_TEST=1
85 83	IN	SSD_NAND_FH_DQ7	NO_TEST=1
85 83	IN	SSD_NAND_FH_DQS_N	NO_TEST=1

NAND

85 82	IN	SSD_NAND_FA_DQ0	NO_TEST=1
85 82	IN	SSD_NAND_FA_DQ1	NO_TEST=1
85 82	IN	SSD_NAND_FA_DQ2	NO_TEST=1
85 82	IN	SSD_NAND_FA_DQ3	NO_TEST=1
85 82	IN	SSD_NAND_FA_DQ4	NO_TEST=1
85 82	IN	SSD_NAND_FA_DQ5	NO_TEST=1
85 82	IN	SSD_NAND_FA_DQ6	NO_TEST=1
85 82	IN	SSD_NAND_FA_DQ7	NO_TEST=1
85 82	IN	SSD_NAND_FA_DQS_N	NO_TEST=1
85 82	IN	SSD_NAND_FA_DQS_P	NO_TEST=1
85 82	IN	SSD_NAND_FB_DQ0	NO_TEST=1
85 82	IN	SSD_NAND_FB_DQ1	NO_TEST=1
85 82	IN	SSD_NAND_FB_DQ2	NO_TEST=1
85 82	IN	SSD_NAND_FB_DQ3	NO_TEST=1
85 82	IN	SSD_NAND_FB_DQ4	NO_TEST=1
85 82	IN	SSD_NAND_FB_DQ5	NO_TEST=1
85 82	IN	SSD_NAND_FB_DQ6	NO_TEST=1
85 82	IN	SSD_NAND_FB_DQ7	NO_TEST=1
85 82	IN	SSD_NAND_FB_DQS_N	NO_TEST=1
85 82	IN	SSD_NAND_FB_DQS_P	NO_TEST=1
85 82	IN	SSD_NAND_FC_DQ0	NO_TEST=1
85 82	IN	SSD_NAND_FC_DQ1	NO_TEST=1
85 82	IN	SSD_NAND_FC_DQ2	NO_TEST=1
85 82	IN	SSD_NAND_FC_DQ3	NO_TEST=1
85 82	IN	SSD_NAND_FC_DQ4	NO_TEST=1
85 82	IN	SSD_NAND_FC_DQ5	NO_TEST=1
85 82	IN	SSD_NAND_FC_DQ6	NO_TEST=1
85 82	IN	SSD_NAND_FC_DQ7	NO_TEST=1
85 82	IN	SSD_NAND_FC_DQS_N	NO_TEST=1
85 82	IN	SSD_NAND_FC_DQS_P	NO_TEST=1
85 82	IN	SSD_NAND_FD_DQ0	NO_TEST=1
85 82	IN	SSD_NAND_FD_DQ1	NO_TEST=1
85 82	IN	SSD_NAND_FD_DQ2	NO_TEST=1
85 82	IN	SSD_NAND_FD_DQ3	NO_TEST=1
85 82	IN	SSD_NAND_FD_DQ4	NO_TEST=1
85 82	IN	SSD_NAND_FD_DQ5	NO_TEST=1
85 82	IN	SSD_NAND_FD_DQ6	NO_TEST=1
85 82	IN	SSD_NAND_FD_DQ7	NO_TEST=1
85 82	IN	SSD_NAND_FD_DQS_N	
85 82	IN	SSD_NAND_FD_DQS_P	
85 83	IN	SSD_NAND_FE_DQ0	NO_TEST=1
85 83	IN	SSD_NAND_FE_DQ1	NO_TEST=1
85 83	IN	SSD_NAND_FE_DQ2	NO_TEST=1
85 83	IN	SSD_NAND_FE_DQ3	NO_TEST=1
85 83	IN	SSD_NAND_FE_DQ4	NO_TEST=1
85 83	IN	SSD_NAND_FE_DQ5	NO_TEST=1
85 83	IN	SSD_NAND_FE_DQ6	NO_TEST=1
85 83	IN	SSD_NAND_FE_DQ7	NO_TEST=1
85 83	IN	SSD_NAND_FE_DQS_N	NO_TEST=1
85 83	IN	SSD_NAND_FE_DQS_P	NO_TEST=1
85 83	IN	SSD_NAND_FF_DQ0	NO_TEST=1
85 83	IN	SSD_NAND_FF_DQ1	NO_TEST=1
85 83	IN	SSD_NAND_FF_DQ2	NO_TEST=1
85 83	IN	SSD_NAND_FF_DQ3	NO_TEST=1
85 83	IN	SSD_NAND_FF_DQ4	NO_TEST=1
85 83	IN	SSD_NAND_FF_DQ5	NO_TEST=1
85 83	IN	SSD_NAND_FF_DQ6	NO_TEST=1
85 83	IN	SSD_NAND_FF_DQ7	NO_TEST=1
85 83	IN	SSD_NAND_FF_DQS_N	NO_TEST=1
85 83	IN	SSD_NAND_FF_DQS_P	NO_TEST=1
85 83	IN	SSD_NAND_FG_DQ0	NO_TEST=1
85 83	IN	SSD_NAND_FG_DQ2	NO_TEST=1
85 83	IN	SSD_NAND_FG_DQ3	NO_TEST=1
85 83	IN	SSD_NAND_FG_DQ4	NO_TEST=1
85 83	IN	SSD_NAND_FG_DQ5	NO_TEST=1
85 83	IN	SSD_NAND_FG_DQ6	NO_TEST=1
85 83	IN	SSD_NAND_FG_DQ7	NO_TEST=1
85 83	IN	SSD_NAND_FG_DQS_N	NO_TEST=1
85 83	IN	SSD_NAND_FG_DQS_P	NO_TEST=1
85 83	IN	SSD_NAND_FH_DQ1	NO_TEST=1
85 83	IN	SSD_NAND_FH_DQ2	NO_TEST=1
85 83	IN	SSD_NAND_FH_DQ3	NO_TEST=1

SYNC_MASTER=X363_SANXOC SYNC_DATE=04/14/2016

PAGE TITLE

ICT & FCT 1

Apple Inc.

DRAWING NUMBER	051-00647
SIZE	D
REVISION	10.0.0
BRANCH	dvt-fab10
PAGE	124 OF 145
SHEET	113 OF 121

NOTICE OF PROPRIETARY PROPERTY:
THE INFORMATION CONTAINED HEREIN IS THE PROPRIETARY PROPERTY OF APPLE INC.
THE POSESSOR AGREES TO THE FOLLOWING:
I TO MAINTAIN THIS DOCUMENT IN CONFIDENCE
II NOT TO REPRODUCE OR COPY IT
III NOT TO REVEAL OR PUBLISH IT IN WHOLE OR PART
IV ALL RIGHTS RESERVED

WWW.AliSaler.Com

MESA CONNECTOR

Refs	Net	Attribute
45	PP3V0_MESA_CONN	FUNC_TEST=TRUE
45	MESA_SPI_MISO_CONN	FUNC_TEST=TRUE
45	MESA_SNSR_INT_CONN	FUNC_TEST=TRUE
45	MESA_BOOST_EN_CONN	FUNC_TEST=TRUE
45 37	MESA_I2C_SDA	FUNC_TEST=TRUE
45 37	MESA_I2C_SCL	FUNC_TEST=TRUE
45	PP1V8_MESA_CONN	FUNC_TEST=TRUE
45	MESA_SPI_MOSI_CONN	FUNC_TEST=TRUE
45	MENU_KEY_L	FUNC_TEST=TRUE
45	MESA_SPI_CLK_CONN	FUNC_TEST=TRUE
45	PP16V0_MESA_CONN	FUNC_TEST=TRUE
	GND	

SPI ROM

Refs	Net	Attribute
114 109	PP3V3_G3H	FUNC_TEST=TRUE
57	SPI_ALT_IO0_MOSI	FUNC_TEST=TRUE
57	SPI_ALT_IO1_MISO	FUNC_TEST=TRUE
57	SPI_ALT_IO2_WP_L	FUNC_TEST=TRUE
57	SPI_ALT_IO3_HOLD_L	FUNC_TEST=TRUE
76 64 57 48 29 114	SMC_RESET_L	FUNC_TEST=TRUE
57	SPI_ALT_CLK	FUNC_TEST=TRUE
57	SPI_ALT_CS_L	FUNC_TEST=TRUE
57 15	SPIROM_USE_MLB	FUNC_TEST=TRUE
57 47 46	SMC_TMS	FUNC_TEST=TRUE
57 47 46	SMC_TCK	FUNC_TEST=TRUE
	GND	

AUDIO AMP

Refs	Net	Attribute
61	SPKRCONN_TR_OUT_POS	FUNC_TEST=TRUE
61	SPKRCONN_TR_OUT_NEG	FUNC_TEST=TRUE
61	SPKRCONN_WR_OUT_POS	FUNC_TEST=TRUE
61	SPKRCONN_WR_OUT_NEG	FUNC_TEST=TRUE
60	SPKRCONN_TL_OUT_POS	FUNC_TEST=TRUE
60	SPKRCONN_TL_OUT_NEG	FUNC_TEST=TRUE
60	SPKRCONN_WL_OUT_POS	FUNC_TEST=TRUE
60	SPKRCONN_WL_OUT_NEG	FUNC_TEST=TRUE
61 58	SPKR_ID0	FUNC_TEST=TRUE
	GND	FUNC_TEST=

DFR Touch Conn

Refs	Net	Qty	Attribute
42	DFR_TOUCH_LID		FUNC_TEST=TRUE
42 38	DFR_TOUCH_GPIO2		FUNC_TEST=TRUE
42 37	DFR_TOUCH_SPI_CS_L		FUNC_TEST=TRUE
42	DFR_TOUCH_SPI_MOSI_R		FUNC_TEST=TRUE
42 38 37	DFR_TOUCH_ROM_I2C_SCL		FUNC_TEST=TRUE
42 38 37	DFR_TOUCH_ROM_I2C_SDA		FUNC_TEST=TRUE
42 37	DFR_TOUCH_RESET_L		FUNC_TEST=TRUE
114 42 37	PP1V8_S0SW_DFR	X2	FUNC_TEST=TRUE
110	PP5V_S0_T139		FUNC_TEST=TRUE
42 38	DFR_TOUCH_PANEL_DETECT		FUNC_TEST=TRUE
114 42 38	DFR_DISP_VSYNC		FUNC_TEST=TRUE
42	DFR_TOUCH_SPI_MISO_R		FUNC_TEST=TRUE
42	DFR_TOUCH_SPI_CLK_R		FUNC_TEST=TRUE
42 38	DFR_TOUCH_INT_L		FUNC_TEST=TRUE
42 38	DFR_CLKIN_RESET_L		FUNC_TEST=TRUE
42 38	DFR_TOUCH_ROM_WC		FUNC_TEST=TRUE
	GND	X4	

DFR Disp Conn

Refs	Net	Qty	Attribute
114 42 38	DFR_DISP_VSYNC		FUNC_TEST=TRUE
42 38	DFR_DISP_TE		FUNC_TEST=TRUE
42 38	DFR_DISP_INT		FUNC_TEST=TRUE
42	DFR_DISP_RESET_L		FUNC_TEST=TRUE
42	PP3V3_S0SW_DFR	X3	FUNC_TEST=TRUE
42 38	MIPID_CLK_P		FUNC_TEST=TRUE
42 38	MIPID_CLK_N		FUNC_TEST=TRUE
42 38	MIPID_DATA_P		FUNC_TEST=TRUE
42 38	MIPID_DATA_N		FUNC_TEST=TRUE
114 42 37	PP1V8_S0SW_DFR	X2	FUNC_TEST=TRUE
42 38 37	DFRDRV_I2C_SCL		FUNC_TEST=TRUE
42 38 37	DFRDRV_I2C_SDA		FUNC_TEST=TRUE
	GND	X6	

KBD CONNECTOR

Refs	Net	Qty	Attribute
43	GND_FAN	X2	FUNC_TEST=TRUE
43	PP5V_S0_FAN_CONN	X2	FUNC_TEST=TRUE
115 56 43	FAN_LT_TACH		FUNC_TEST=TRUE
115 56 43	FAN_LT_PWM		FUNC_TEST=TRUE
110	PP5V_S0_KBD	X2	FUNC_TEST=TRUE
114 109	PP3V3_G3H		FUNC_TEST=TRUE
114 43	KBD_BLC_GSSOUT		FUNC_TEST=TRUE
114 43	KBD_BLC_GSLAT		FUNC_TEST=TRUE
110 103 29	PP3V3_S4		FUNC_TEST=TRUE
114 43	KBD_BLC_GSSIN		FUNC_TEST=TRUE
43	KBD_BLC_XBLANK		FUNC_TEST=TRUE
115 56 43	FAN_RT_TACH		FUNC_TEST=TRUE
115 56 43	FAN_RT_PWM		FUNC_TEST=TRUE
114 43	KBD_I2C_SDA		FUNC_TEST=TRUE
114 43	KBD_INT_L		FUNC_TEST=TRUE
114 43	KBD_I2C_SCL		FUNC_TEST=TRUE
114 48 43	SMC_LSOC_RST_L		FUNC_TEST=TRUE
114 43	KBD_BLC_GSSCK		FUNC_TEST=TRUE
	GND	X5	

TPAD CONNECTOR

Refs	Net	Qty	Attribute
114 43	KBD_I2C_SCL		FUNC_TEST=TRUE
114 43	KBD_I2C_SDA		FUNC_TEST=TRUE
114 43	KBD_INT_L		FUNC_TEST=TRUE
49 46	SMBUS_SMC_3_SDA		FUNC_TEST=TRUE
49 46	SMBUS_SMC_3_SCL		FUNC_TEST=TRUE
110	PP3V3_S4_TPAD		FUNC_TEST=TRUE
43	PP5V_S4_TPAD_CONN		FUNC_TEST=TRUE
43	ACT_GND	X4	FUNC_TEST=TRUE
43	PPVIN_S4_TPAD_FUSE	X4	FUNC_TEST=TRUE
43 13	TPAD_SPI_CLK		FUNC_TEST=TRUE
43	TPAD_SPI_IF_EN_CONN		FUNC_TEST=TRUE
43 13	TPAD_SPI_MISO		FUNC_TEST=TRUE
43	TPAD_SPI_CS_L_CONN		FUNC_TEST=TRUE
43 13	TPAD_SPI_MOSI		FUNC_TEST=TRUE
43	TPAD_SPI_INT_L_CONN		FUNC_TEST=TRUE
48 46	SMC_ACTUATOR_DISABLE_L		FUNC_TEST=TRUE
48 47 46	SMC_PME_S4_WAKE_L		FUNC_TEST=TRUE
48 47 43 42	SMC_LID		FUNC_TEST=TRUE
114 43	KBD_BLC_GSLAT		FUNC_TEST=TRUE
114 43	KBD_BLC_GSSCK		FUNC_TEST=TRUE
114 43	KBD_BLC_GSSOUT		FUNC_TEST=TRUE
46 43	SMC_VIBE_L		FUNC_TEST=TRUE
114 43	KBD_BLC_GSSIN		FUNC_TEST=TRUE
	GND	X3	

eDP

Refs	Net	Qty	Attribute
116 76 75	PPVOUT_S0_LCDBKLT		FUNC_TEST=TRUE
76	PP3V3_S0SW_LCD	X2	FUNC_TEST=TRUE
76	EDP_AUXCH_C_N		FUNC_TEST=TRUE
76	EDP_AUXCH_C_P		FUNC_TEST=TRUE
111 76	EDP_INT_ML_N<0>		FUNC_TEST=TRUE
111 76	EDP_INT_ML_P<0>		FUNC_TEST=TRUE
111 76	EDP_INT_ML_N<1>		FUNC_TEST=TRUE
111 76	EDP_INT_ML_P<1>		FUNC_TEST=TRUE
111 76	EDP_INT_ML_N<2>		FUNC_TEST=TRUE
111 76	EDP_INT_ML_P<2>		FUNC_TEST=TRUE
111 76	EDP_INT_ML_N<3>		FUNC_TEST=TRUE
111 76	EDP_INT_ML_P<3>		FUNC_TEST=TRUE
38	MIPIC_CLK_N		FUNC_TEST=TRUE
38	MIPIC_CLK_P		FUNC_TEST=TRUE
76	PP5V_S0SW_LCD		FUNC_TEST=TRUE
76 38	PP5V_S0_ALSCAM_F		FUNC_TEST=TRUE
76 42	I2C_ALS_SDA		FUNC_TEST=TRUE
76 42	I2C_ALS_SCL		FUNC_TEST=TRUE
76 38 37	I2C_CAM_SCL		FUNC_TEST=TRUE
76 38 37	I2C_CAM_SDA		FUNC_TEST=TRUE
111 76	I2C_BKLT_SDA		FUNC_TEST=TRUE
111 76	I2C_BKLT_SCL		FUNC_TEST=TRUE
49 46	SMBUS_SMC_0_S0_SDA		FUNC_TEST=TRUE
49 46	SMBUS_SMC_0_S0_SCL		FUNC_TEST=TRUE
76 48	BKLT_PWM_TCON2MLB		FUNC_TEST=TRUE
76 20	BKLT_PWM_MLB2TCON		FUNC_TEST=TRUE
89 76	LCD_FSS		FUNC_TEST=TRUE
76 15	LCD_IRQ_L		FUNC_TEST=TRUE
76	BUF_EDP_PANEL_PWR_EN		FUNC_TEST=TRUE
89 76	DP_INT_HPD		FUNC_TEST=TRUE
	GND	X3	
76 49	SMBUS_SMC_0_S0_SCL		FUNC_TEST=TRUE
76 49	SMBUS_SMC_0_S0_SDA		FUNC_TEST=TRUE
38	MIPIC_DATA_P		FUNC_TEST=TRUE
38	MIPIC_DATA_N		FUNC_TEST=TRUE

AUDIO JACK

Refs	Net	Qty	Attribute
62	AUD_CONN_HP_LEFT		FUNC_TEST=TRUE
62	AUD_CONN_HP_RIGHT		FUNC_TEST=TRUE
62	AUD_CONN_RING2		FUNC_TEST=TRUE
62	AUD_CONN_SLEEVE		FUNC_TEST=TRUE
62	AUD_CONN_HP_SENSE_L		FUNC_TEST=TRUE
62	AUD_CONN_HP_SENSE_R		FUNC_TEST=TRUE
62	AUD_CONN_TIP_SENSE		FUNC_TEST=TRUE
62	AUD_CONN_SLEEVE_XW		FUNC_TEST=TRUE
62	AUD_CONN_RING2_XW		FUNC_TEST=TRUE
	GND	X2	

BATTERY TUBA

Refs	Net	Qty	Attribute
64 63	PPVBAT_G3H_CONN	X7	FUNC_TEST=TRUE
49 46	SMBUS_SMC_5_G3_SCL		FUNC_TEST=TRUE
49 46	SMBUS_SMC_5_G3_SDA		FUNC_TEST=TRUE
63	TP_BMON_IOUT		FUNC_TEST=TRUE
64 50	CHGR_AMON		FUNC_TEST=TRUE
64 50	CHGR_BMON		FUNC_TEST=TRUE
63	SYS_DETECT_L		FUNC_TEST=TRUE
	GND	X5	
114 48 43	SMC_LSOC_RST_L		FUNC_TEST=TRUE
64	TBA_COMP		FUNC_TEST=TRUE
64	TBA_VDDA		FUNC_TEST=TRUE
64	TBA_LX1		FUNC_TEST=TRUE
64	TBA_LX2		FUNC_TEST=TRUE
	GND	X2	
64	PPVBAT_G3H_CHGR_REG	X5	FUNC_TEST=TRUE
116 64 63	PPDCIN_G3H_CHGR	X5	FUNC_TEST=TRUE

USB_C

TP_UPC_XA_SWD_DATA ------------------------> TP3001
TP_UPC_XA_SWD_CLK ------------------------> TP3002
TP_UPC_XB_SWD_DATA ------------------------> TP3003
TP_UPC_XB_SWD_CLK ------------------------> TP3004

Refs	Net	Qty	Attribute
104 103	TP_UPC_TA_DBG_UART_TX		FUNC_TEST=TRUE
104 103	TP_UPC_TA_DBG_UART_RX		FUNC_TEST=TRUE
105 103	TP_UPC_TB_DBG_UART_TX		FUNC_TEST=TRUE
105 103	TP_UPC_TB_DBG_UART_RX		FUNC_TEST=TRUE
30 29	UPC_XA_DBG_UART_TX		FUNC_TEST=TRUE
30 29	UPC_XA_DBG_UART_RX		FUNC_TEST=TRUE
31 29	TP_UPC_XB_DBG_UART_TX		FUNC_TEST=TRUE
31 29	TP_UPC_XB_DBG_UART_RX		FUNC_TEST=TRUE
116 115 106	PP20V_USBC_TB_VBUS_CONN	X5	FUNC_TEST=TRUE
116 115 106	PP20V_USBC_TA_VBUS_CONN	X5	FUNC_TEST=TRUE
	GND	X5	
116 115 32	PP20V_USBC_XB_VBUS_CONN	X4	FUNC_TEST=TRUE
116 115 32	PP20V_USBC_XA_VBUS_CONN	X5	FUNC_TEST=TRUE
	GND	X5	

SSD DEBUG CONNECTOR

Refs	Net	Attribute
115 87 77	SSD_BOOT_LB_L	FUNC_TEST=TRUE
80 77	SSD_BOOT_LB_L	FUNC_TEST=TRUE
103 86 80	SSD_DEBUG_I2C_CLK_CONN	FUNC_TEST=TRUE
103 86 80	SSD_DEBUG_I2C_DAT_CONN	FUNC_TEST=TRUE
80 77 48	SMC_OOB1_R2D_L	FUNC_TEST=TRUE
80 77 48	SMC_OOB1_D2R_L	FUNC_TEST=TRUE
83 82 81 80 78 77 15 84	PP1V8_SSD_FMC	FUNC_TEST=TRUE
	GND	

MIC

Refs	Net	Attribute
58	DMIC1_CLK	FUNC_TEST=TRUE
58	DMIC1_DATA	FUNC_TEST=TRUE
58	DMIC2_CLK	FUNC_TEST=TRUE
58	DMIC2_DATA	FUNC_TEST=TRUE
109 61	PP1V8_S0	FUNC_TEST=TRUE
	GND	

USB-C PROBE BLOCK TESTING

Refs	Net	Attribute	Test point
32	TP_J3300_P2	FUNC_TEST=TRUE	TPAC580
32	TP_J3300_P56	FUNC_TEST=TRUE	TPAC581
106	TP_JB500_P2		TPAC582
106	TP_JB500_P56	FUNC_TEST=TRUE	TPAC583

ADDITIONAL TPs

Refs	Net	Attribute	Test point
110	PP3V3_S5	FUNC_TEST=TRUE	TPAC584
110	PP3V3_SUS	FUNC_TEST=TRUE	TPAC585

Wifi & SSD fixture Test Points

(row,col)=(4,2) Diameter=0.6mm Pitch=1mm

Right Side - Top Layer

Refs	Net	Type	Test point
	(GND)	TP-P6	TPAC528
80 77	SSD_JTAG_TMS	TP-P6	TPAC519
80 77	SSD_JTAG_TCK	TP-P6	TPAC520
80 77	SSD_JTAG_TDI	TP-P6	TPAC521
80 77	SSD_JTAG_TDO	TP-P6	TPAC522
86 77	SSD_DEBUG_I2C_CLK	TP-P6	TPAC523
86 77	SSD_DEBUG_I2C_DAT	TP-P6	TPAC524
84 77	SSD_PGOOD_L	TP-P6	TPAC535

(row,col)=(2,6) Diameter=0.6mm Pitch=1mm

Left Side - Top Layer

Refs	Net	Type	Test point
50 114 116 29 64	PPDCIN_G3H	TP-P6	TPAC500
50 114 116 29 64	PPDCIN_G3H	TP-P6	TPAC501
50 114 116 29 64	PPDCIN_G3H	TP-P6	TPAC502
50 114 116 29 64	PPDCIN_G3H	TP-P6	TPAC503
	(GND)	TP-P6	TPAC504
	(GND)	TP-P6	TPAC505
	(GND)	TP-P6	TPAC506
	(GND)	TP-P6	TPAC507
	GND (TRUE)	TP-P6	TPAC529
64	HPWR_EN_L	TP-P6	TPAC512
110	PP3V3_S0	TP-P6	TPAC536
114 109	PP3V3_G3H	TP-P6	TPAC518

(row,col)=(5,5) Diameter=0.6mm Pitch=1mm

Middle - Top Layer

Refs	Net	Type	Test point
46 48 45 47	SMC_ONOFF_L	TP-P6	TPAC517
	(GND)	TP-P6	TPAC538
76 48 64 114 29 57	SMC_RESET_L	TP-P6	TPAC539
	(GND)	TP-P6	TPAC527
14	USB3_TEST_D2R_N	TP-P6	TPAC510
14	USB3_TEST_D2R_P	TP-P6	TPAC511
	(GND)	TP-P6	TPAC595
	(GND)	TP-P6	TPAC596
84 78	PP1V0_SSD_CORE	TP-P6	TPAC598
109	PPVCC_S0_CPU	TP-P6	TPAC597
109	PPBUS_G3H	TP-P6	TPAC599
14	USB3_TEST_R2D_N	TP-P6	TPAC525
14	USB3_TEST_R2D_P	TP-P6	TPAC526
20 36 15 35	AP_RESET_L	TP-P6	TPAC537
14	USB_TEST_P	TP-P6	TPAC530
14	USB_TEST_N	TP-P6	TPAC531
20 115 14 87	SSD_RESET_L	TP-P6	TPAC532
46 12 73	PM_PCH_SYS_PWROK	TP-P6	TPAC533
87 14 115	SSD_PWR_EN	TP-P6	TPAC534
46 29 47	SMC_DEBUGPRT_TX_L	TP-P6	TPAC508
46 29 47	SMC_DEBUGPRT_RX_L	TP-P6	TPAC509
87 115 15 101	SSD_BOOT_L	TP-P6	TPAC513
73 20 46 89 70 12 27 76	PM_SLP_S3_L	TP-P6	TPAC514
48	SMC_DEV_SUPPLY_R_L	TP-P6	TPAC515
20 12 35	PLT_RST_L	TP-P6	TPAC516

SYNC_MASTER=J80_BBABADI_MLB_BAFFIN SYNC_DATE=12/10/2015

PAGE TITLE: ICT & FCT 2

Apple Inc.

DRAWING NUMBER: 051-00647 SIZE: D
REVISION: 10.0.0
BRANCH: dvt-fab10
PAGE: 125 OF 145
SHEET: 114 OF 121

NOTICE OF PROPRIETARY PROPERTY:
THE INFORMATION CONTAINED HEREIN IS THE PROPRIETARY PROPERTY OF APPLE INC.
THE POSESSOR AGREES TO THE FOLLOWING:
I TO MAINTAIN THIS DOCUMENT IN CONFIDENCE
II NOT TO REPRODUCE OR COPY IT
III NOT TO REVEAL OR PUBLISH IT IN WHOLE OR PART
IV ALL RIGHTS RESERVED

WWW.AliSaler.Com

OTHER TEST POINTS / NC

NC with No Testpoint Property

13	NC_CLINK_CLK	1	TRUE	NC_CLINK_CLK
13	NC_CLINK_DATA	1	TRUE	NC_CLINK_DATA
13	NC_CLINK_RESET_L	1	TRUE	NC_CLINK_RESET_L
113 18 12	NC_ITPXDP_CLK100MN	1	TRUE	NC_ITPXDP_CLK100MN
113 18 12	NC_ITPXDP_CLK100MP	1	TRUE	NC_ITPXDP_CLK100MP
13	NC_HDA_SDIN1	1	TRUE	NC_HDA_SDIN1
TP	1	NC_SPI_SMC_MOSI	48	
TP	1	NC_SPI_SMC_MISO	48	
TP	1	NC_SPI_SMC_CS_L	48	
TP	1	NC_SPI_SMC_CLK	48	
TP		NC_PCH_CLK32K_RTCX2	20	

FAN Test Points

TP	TRUE	FAN_LT_PWM	43 56 114
TP	TRUE	FAN_LT_TACH	43 56 114
TP	TRUE	PP5V_S0	38 110 115
TP	TRUE	FAN_RT_PWM	43 56 114
TP	TRUE	FAN_RT_TACH	43 56 114
TP	TRUE	PP5V_S0	38 110 115

XDP Test-Points

TP	TRUE	XDP_CPU_TCK	6 18
TP	TRUE	XDP_PCH_TCK	13 18
TP	TRUE	XDP_CPU_TDI	6 18
TP	TRUE	XDP_CPU_TDO	6 18
TP	TRUE	XDP_CPU_TRST_L	6 13 18
TP	TRUE	XDP_CPU_TMS	6 18
TP	TRUE	XDP_PCH_TMS	13 18
TP	TRUE	XDP_PCH_TDI	13 18
TP	TRUE	XDP_PCH_TDO	13 18
TP	TRUE	XDP_CPU_PREQ_L	6 13 18
TP	TRUE	XDP_CPU_PRDY_L	6 13 18
TP	TRUE	PM_RSMRST_L	12 18 46 73
TP	TRUE	PM_PCH_PWROK	12 70
TP	TRUE	PM_SYSRST_L	12 18 46
TP	TRUE	CPU_CFG<3>	6 18

CPU (Refer to CPU pages)

CPU_DC_B2_C1	---------->	TP0501
CPU_DC_B38_C38	---------->	TP0502
CPU_DC_BR2_BR1	---------->	TP0503
CPU_DC_C1_B2	---------->	TP0504
CPU_DC_C38_B38	---------->	TP0505
CPU_DC_BR1_BR2	---------->	TP0610
CPU_DC_BR38_BT36	---------->	TP0900
CPU_DC_BT36_BR38	---------->	TP0901

PCH (Refer to PCH pages)

XDP_PCH_OBSDATA_A0	---------->	TP1883
XDP_PCH_OBSDATA_A1	---------->	TP1884
XDP_PCH_OBSDATA_A2	---------->	TP1870
XDP_PCH_OBSDATA_A3	---------->	TP1871
XDP_PCH_OBSDATA_B0	---------->	TP1872
XDP_PCH_OBSDATA_B1	---------->	TP1885
XDP_PCH_OBSDATA_B2	---------->	TP1886
XDP_PCH_OBSDATA_B3	---------->	TP1887
XDP_PCH_OBSDATA_D0	---------->	TP1877
XDP_PCH_OBSDATA_D1	---------->	TP1878
XDP_PCH_OBSDATA_D2	---------->	TP1879
XDP_PCH_OBSDATA_D3	---------->	TP1880
XDP_PCH_OBSFN_C0	---------->	TP1882
XDP_BPM_L<0>	---------->	TP1800
XDP_BPM_L<1>	---------->	TP1801
XDP_BPM_L<2>	---------->	TP1802
XDP_BPM_L<3>	---------->	TP1803
NC_USB_EXTA_OC_L	---------->	TP1873
NC_USB_EXTB_OC_L	---------->	TP1874
NC_USB_EXTC_OC_L	---------->	TP1875
NC_USB_EXTD_OC_L	---------->	TP1876

TPs on BOTTOM to check USB-C Instalation

TP	USBC_XA_SBU1	FUNC_TEST=TRUE	30 32
TP	USBC_XB_SBU1	FUNC_TEST=TRUE	31 32
TP	USBC_XA_SBU2	FUNC_TEST=TRUE	30 32
TP	USBC_XB_SBU2	FUNC_TEST=TRUE	31 32
TP	USBC_TA_SBU1	FUNC_TEST=TRUE	104 106
TP	USBC_TB_SBU1	FUNC_TEST=TRUE	105 106
TP	USBC_TA_SBU2	FUNC_TEST=TRUE	104 106
TP	USBC_TB_SBU2	FUNC_TEST=TRUE	105 106
TP	PP20V_USBC_XA_VBUS_CONN	FUNC_TEST=TRUE	32 114 116
TP	PP20V_USBC_XB_VBUS_CONN	FUNC_TEST=TRUE	32 114 116
TP	PP20V_USBC_TA_VBUS_CONN	FUNC_TEST=TRUE	106 114 116
TP	PP20V_USBC_TB_VBUS_CONN	FUNC_TEST=TRUE	106 114 116

TPs to check LifeBoat Instalation

TP	PP3V3_S5_POLARIS	FUNC_TEST=TRUE	84 87
TP	PP3V3_S5	FUNC_TEST=TRUE	110
TP	SSD_PWR_EN	FUNC_TEST=TRUE	14 87 114
TP	SSD_PWR_LB_EN	FUNC_TEST=TRUE	84 87
TP	SSD_BOOT_L	FUNC_TEST=TRUE	15 87 114
TP	SSD_BOOT_LB_L	FUNC_TEST=TRUE	77 87 114
TP	SSD_RESET_L	FUNC_TEST=TRUE	14 20 87 114
TP	SSD_RESET_LB_L	FUNC_TEST=TRUE	77 87
TP	SSD_CLKREQ_L	FUNC_TEST=TRUE	20 87
TP	SSD_CLKREQ_LB_L	FUNC_TEST=TRUE	77 87

SYNC_MASTER=X363_BBABADI SYNC_DATE=01/26/2016

PAGE TITLE
NC & No Test

Apple Inc.

DRAWING NUMBER 051-00647 SIZE D
REVISION 10.0.0
BRANCH dvt-fab10
PAGE 126 OF 145
SHEET 115 OF 121

NOTICE OF PROPRIETARY PROPERTY:
THE INFORMATION CONTAINED HEREIN IS THE PROPRIETARY PROPERTY OF APPLE INC.
THE POSESSOR AGREES TO THE FOLLOWING:
I TO MAINTAIN THIS DOCUMENT IN CONFIDENCE
II NOT TO REPRODUCE OR COPY IT
III NOT TO REVEAL OR PUBLISH IT IN WHOLE OR PART
IV ALL RIGHTS RESERVED

WWW.AliSaler.Com

PART NUMBER	QTY	DESCRIPTION	REFERENCE DES	CRITICAL	BOM OPTION
131S00041	6	CAP,CER,12PF,5%,100V,C0G,0402	CC784,CC785,CC786,CC787,CC788	CRITICAL	

PAGE TITLE
Desense Caps

Apple Inc.

DRAWING NUMBER 051-00647 SIZE D
REVISION 10.0.0
BRANCH dvt-fab10
PAGE 127 OF 145
SHEET 116 OF 121

NOTICE OF PROPRIETARY PROPERTY:
THE INFORMATION CONTAINED HEREIN IS THE PROPRIETARY PROPERTY OF APPLE INC.
THE POSESSOR AGREES TO THE FOLLOWING:
I TO MAINTAIN THIS DOCUMENT IN CONFIDENCE
II NOT TO REPRODUCE OR COPY IT
III NOT TO REVEAL OR PUBLISH IT IN WHOLE OR PART
IV ALL RIGHTS RESERVED

WWW.AliSaler.Com

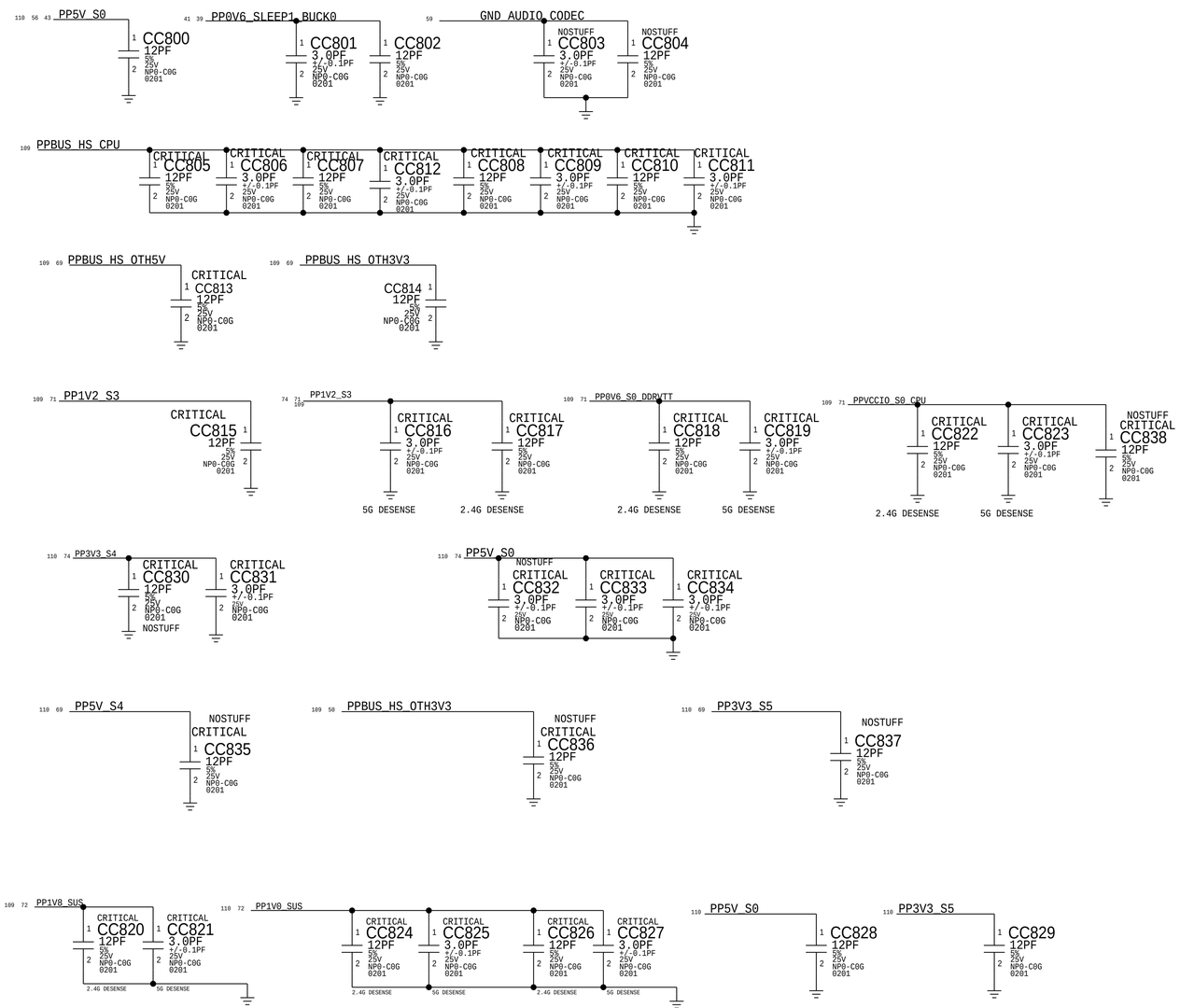

BOM_COST_GROUP=WIRELESS

PAGE TITLE
Desense Caps

Apple Inc.

DRAWING NUMBER 051-00647 | SIZE D
REVISION 10.0.0
BRANCH dvt-fab10
PAGE 128 OF 145
SHEET 117 OF 121

NOTICE OF PROPRIETARY PROPERTY:
THE INFORMATION CONTAINED HEREIN IS THE PROPRIETARY PROPERTY OF APPLE INC.
THE POSESSOR AGREES TO THE FOLLOWING:
I TO MAINTAIN THIS DOCUMENT IN CONFIDENCE
II NOT TO REPRODUCE OR COPY IT
III NOT TO REVEAL OR PUBLISH IT IN WHOLE OR PART
IV ALL RIGHTS RESERVED

WWW.AliSaler.Com

SYNC_MASTER=X363_ZIFENGSHEN SYNC_DATE=06/02/2016

PAGE TITLE

Project Specific Constraints

Apple Inc.

DRAWING NUMBER 051-00647

SIZE D

REVISION 10.0.0

BRANCH dvt-fab10

PAGE 130 OF 145

SHEET 118 OF 121

NOTICE OF PROPRIETARY PROPERTY:

THE INFORMATION CONTAINED HEREIN IS THE PROPRIETARY PROPERTY OF APPLE INC.
THE POSESSOR AGREES TO THE FOLLOWING:

I TO MAINTAIN THIS DOCUMENT IN CONFIDENCE

II NOT TO REPRODUCE OR COPY IT

III NOT TO REVEAL OR PUBLISH IT IN WHOLE OR PART

IV ALL RIGHTS RESERVED

WWW.AliSaler.Com

BOM Variants

44 ULA Configs

BOM NUMBER	BOM NAME	BOM OPTIONS
639-02212	MLB,2.6G,MC-16,ULA-MC,SSD-1TB,X363G	BASE_BOM,DEVEL_BOM,CPU_SKL:2.6,RAM_16G_MICRON_2133,4GB_MC_BAFFIN,BAFFIN_ULA,SSD_CONFIG:1TB
639-02120	MLB,2.6G,MC-16,ULA-MC,SSD-256,X363G	BASE_BOM,DEVEL_BOM,CPU_SKL:2.6,RAM_16G_MICRON_2133,4GB_MC_BAFFIN,BAFFIN_ULA,SSD_CONFIG:256GB
639-02591	MLB,2.6G,MC-16,ULA-MC,SSD-2TB,X363G	BASE_BOM,DEVEL_BOM,CPU_SKL:2.6,RAM_16G_MICRON_2133,4GB_MC_BAFFIN,BAFFIN_ULA,SSD_CONFIG:2TB
639-02214	MLB,2.6G,MC-16,ULA-MC,SSD-512,X363G	BASE_BOM,DEVEL_BOM,CPU_SKL:2.6,RAM_16G_MICRON_2133,4GB_MC_BAFFIN,BAFFIN_ULA,SSD_CONFIG:512GB
639-02587	MLB,2.6G,SM-16,ULA-MC,SSD-1TB,X363G	BASE_BOM,DEVEL_BOM,CPU_SKL:2.6,RAM_16G_SAMSUNG_2133,4GB_MC_BAFFIN,BAFFIN_ULA,SSD_CONFIG:1TB
639-02116	MLB,2.6G,SM-16,ULA-MC,SSD-256,X363G	BASE_BOM,DEVEL_BOM,CPU_SKL:2.6,RAM_16G_SAMSUNG_2133,4GB_MC_BAFFIN,BAFFIN_ULA,SSD_CONFIG:256GB
639-02589	MLB,2.6G,SM-16,ULA-MC,SSD-2TB,X363G	BASE_BOM,DEVEL_BOM,CPU_SKL:2.6,RAM_16G_SAMSUNG_2133,4GB_MC_BAFFIN,BAFFIN_ULA,SSD_CONFIG:2TB
639-02586	MLB,2.6G,SM-16,ULA-MC,SSD-512,X363G	BASE_BOM,DEVEL_BOM,CPU_SKL:2.6,RAM_16G_SAMSUNG_2133,4GB_MC_BAFFIN,BAFFIN_ULA,SSD_CONFIG:512GB
639-01615	MLB,2.7G,MC-16,ULA-MC,SSD-1TB,X363G	BASE_BOM,DEVEL_BOM,CPU_SKL:2.7,RAM_16G_MICRON_2133,4GB_MC_BAFFIN,BAFFIN_ULA,SSD_CONFIG:1TB
639-02592	MLB,2.7G,MC-16,ULA-MC,SSD-2TB,X363G	BASE_BOM,DEVEL_BOM,CPU_SKL:2.7,RAM_16G_MICRON_2133,4GB_MC_BAFFIN,BAFFIN_ULA,SSD_CONFIG:2TB
639-01614	MLB,2.7G,MC-16,ULA-MC,SSD-512,X36G3	BASE_BOM,DEVEL_BOM,CPU_SKL:2.7,RAM_16G_MICRON_2133,4GB_MC_BAFFIN,BAFFIN_ULA,SSD_CONFIG:512GB
639-01603	MLB,2.7G,SM-16,ULA-MC,SSD-1TB,X363G	BASE_BOM,DEVEL_BOM,CPU_SKL:2.7,RAM_16G_SAMSUNG_2133,4GB_MC_BAFFIN,BAFFIN_ULA,SSD_CONFIG:1TB
639-02594	MLB,2.7G,SM-16,ULA-MC,SSD-2TB,X363G	BASE_BOM,DEVEL_BOM,CPU_SKL:2.7,RAM_16G_SAMSUNG_2133,4GB_MC_BAFFIN,BAFFIN_ULA,SSD_CONFIG:2TB
639-01602	MLB,2.7G,SM-16,ULA-MC,SSD-512,X363G	BASE_BOM,DEVEL_BOM,CPU_SKL:2.7,RAM_16G_SAMSUNG_2133,4GB_MC_BAFFIN,BAFFIN_ULA,SSD_CONFIG:512GB
639-01639	MLB,2.9G,MC-16,ULA-MC,SSD-1TB,X363G	BASE_BOM,DEVEL_BOM,CPU_SKL:2.9,RAM_16G_MICRON_2133,4GB_MC_BAFFIN,BAFFIN_ULA,SSD_CONFIG:1TB
639-01637	MLB,2.9G,MC-16,ULA-MC,SSD-256,X363G	BASE_BOM,DEVEL_BOM,CPU_SKL:2.9,RAM_16G_MICRON_2133,4GB_MC_BAFFIN,BAFFIN_ULA,SSD_CONFIG:256GB
639-02596	MLB,2.9G,MC-16,ULA-MC,SSD-2TB,X363G	BASE_BOM,DEVEL_BOM,CPU_SKL:2.9,RAM_16G_MICRON_2133,4GB_MC_BAFFIN,BAFFIN_ULA,SSD_CONFIG:2TB
639-01638	MLB,2.9G,MC-16,ULA-MC,SSD-512,X363G	BASE_BOM,DEVEL_BOM,CPU_SKL:2.9,RAM_16G_MICRON_2133,4GB_MC_BAFFIN,BAFFIN_ULA,SSD_CONFIG:512GB
639-01627	MLB,2.9G,SM-16,ULA-MC,SSD-1TB,X363G	BASE_BOM,DEVEL_BOM,CPU_SKL:2.9,RAM_16G_SAMSUNG_2133,4GB_MC_BAFFIN,BAFFIN_ULA,SSD_CONFIG:1TB
639-01625	MLB,2.9G,SM-16,ULA-MC,SSD-256,X363G	BASE_BOM,DEVEL_BOM,CPU_SKL:2.9,RAM_16G_SAMSUNG_2133,4GB_MC_BAFFIN,BAFFIN_ULA,SSD_CONFIG:256GB
639-02598	MLB,2.9G,SM-16,ULA-MC,SSD-2TB,X363G	BASE_BOM,DEVEL_BOM,CPU_SKL:2.9,RAM_16G_SAMSUNG_2133,4GB_MC_BAFFIN,BAFFIN_ULA,SSD_CONFIG:2TB
639-01626	MLB,2.9G,SM-16,ULA-MC,SSD-512,X363G	BASE_BOM,DEVEL_BOM,CPU_SKL:2.9,RAM_16G_SAMSUNG_2133,4GB_MC_BAFFIN,BAFFIN_ULA,SSD_CONFIG:512GB
639-02154	MLB,2.6G,MC-16,ULA-SM,SSD-1TB,X363G	BASE_BOM,DEVEL_BOM,CPU_SKL:2.6,RAM_16G_MICRON_2133,4GB_SM_BAFFIN,BAFFIN_ULA,SSD_CONFIG:1TB
639-02119	MLB,2.6G,MC-16,ULA-SM,SSD-256,X363G	BASE_BOM,DEVEL_BOM,CPU_SKL:2.6,RAM_16G_MICRON_2133,4GB_SM_BAFFIN,BAFFIN_ULA,SSD_CONFIG:256GB
639-02590	MLB,2.6G,MC-16,ULA-SM,SSD-2TB,X363G	BASE_BOM,DEVEL_BOM,CPU_SKL:2.6,RAM_16G_MICRON_2133,4GB_SM_BAFFIN,BAFFIN_ULA,SSD_CONFIG:2TB
639-02213	MLB,2.6G,MC-16,ULA-SM,SSD-512,X363G	BASE_BOM,DEVEL_BOM,CPU_SKL:2.6,RAM_16G_MICRON_2133,4GB_SM_BAFFIN,BAFFIN_ULA,SSD_CONFIG:512GB
639-02211	MLB,2.6G,SM-16,ULA-SM,SSD-1TB,X363G	BASE_BOM,DEVEL_BOM,CPU_SKL:2.6,RAM_16G_SAMSUNG_2133,4GB_SM_BAFFIN,BAFFIN_ULA,SSD_CONFIG:1TB
639-02115	MLB,2.6G,SM-16,ULA-SM,SSD-256,X363G	BASE_BOM,DEVEL_BOM,CPU_SKL:2.6,RAM_16G_SAMSUNG_2133,4GB_SM_BAFFIN,BAFFIN_ULA,SSD_CONFIG:256GB
639-02588	MLB,2.6G,SM-16,ULA-SM,SSD-2TB,X363G	BASE_BOM,DEVEL_BOM,CPU_SKL:2.6,RAM_16G_SAMSUNG_2133,4GB_SM_BAFFIN,BAFFIN_ULA,SSD_CONFIG:2TB
639-02585	MLB,2.6G,SM-16,ULA-SM,SSD-512,X363G	BASE_BOM,DEVEL_BOM,CPU_SKL:2.6,RAM_16G_SAMSUNG_2133,4GB_SM_BAFFIN,BAFFIN_ULA,SSD_CONFIG:512GB
639-01612	MLB,2.7G,MC-16,ULA-SM,SSD-1TB,X363G	BASE_BOM,DEVEL_BOM,CPU_SKL:2.7,RAM_16G_MICRON_2133,4GB_SM_BAFFIN,BAFFIN_ULA,SSD_CONFIG:1TB
639-02593	MLB,2.7G,MC-16,ULA-SM,SSD-2TB,X363G	BASE_BOM,DEVEL_BOM,CPU_SKL:2.7,RAM_16G_MICRON_2133,4GB_SM_BAFFIN,BAFFIN_ULA,SSD_CONFIG:2TB
639-01611	MLB,2.7G,MC-16,ULA-SM,SSD-512,X363G	BASE_BOM,DEVEL_BOM,CPU_SKL:2.7,RAM_16G_MICRON_2133,4GB_SM_BAFFIN,BAFFIN_ULA,SSD_CONFIG:512GB
639-01600	MLB,2.7G,SM-16,ULA-SM,SSD-1TB,X363G	BASE_BOM,DEVEL_BOM,CPU_SKL:2.7,RAM_16G_SAMSUNG_2133,4GB_SM_BAFFIN,BAFFIN_ULA,SSD_CONFIG:1TB
639-02595	MLB,2.7G,SM-16,ULA-SM,SSD-2TB,X363G	BASE_BOM,DEVEL_BOM,CPU_SKL:2.7,RAM_16G_SAMSUNG_2133,4GB_SM_BAFFIN,BAFFIN_ULA,SSD_CONFIG:2TB
639-01599	MLB,2.7G,SM-16,ULA-SM,SSD-512,X363G	BASE_BOM,DEVEL_BOM,CPU_SKL:2.7,RAM_16G_SAMSUNG_2133,4GB_SM_BAFFIN,BAFFIN_ULA,SSD_CONFIG:512GB
639-01636	MLB,2.9G,MC-16,ULA-SM,SSD-1TB,X363G	BASE_BOM,DEVEL_BOM,CPU_SKL:2.9,RAM_16G_MICRON_2133,4GB_SM_BAFFIN,BAFFIN_ULA,SSD_CONFIG:1TB
639-01634	MLB,2.9G,MC-16,ULA-SM,SSD-256,X363G	BASE_BOM,DEVEL_BOM,CPU_SKL:2.9,RAM_16G_MICRON_2133,4GB_SM_BAFFIN,BAFFIN_ULA,SSD_CONFIG:256GB
639-02597	MLB,2.9G,MC-16,ULA-SM,SSD-2TB,X363G	BASE_BOM,DEVEL_BOM,CPU_SKL:2.9,RAM_16G_MICRON_2133,4GB_SM_BAFFIN,BAFFIN_ULA,SSD_CONFIG:2TB
639-01635	MLB,2.9G,MC-16,ULA-SM,SSD-512,X363G	BASE_BOM,DEVEL_BOM,CPU_SKL:2.9,RAM_16G_MICRON_2133,4GB_SM_BAFFIN,BAFFIN_ULA,SSD_CONFIG:512GB
639-01624	MLB,2.9G,SM-16,ULA-SM,SSD-1TB,X363G	BASE_BOM,DEVEL_BOM,CPU_SKL:2.9,RAM_16G_SAMSUNG_2133,4GB_SM_BAFFIN,BAFFIN_ULA,SSD_CONFIG:1TB
639-01622	MLB,2.9G,SM-16,ULA-SM,SSD-256,X363G	BASE_BOM,DEVEL_BOM,CPU_SKL:2.9,RAM_16G_SAMSUNG_2133,4GB_SM_BAFFIN,BAFFIN_ULA,SSD_CONFIG:256GB
639-02599	MLB,2.9G,SM-16,ULA-SM,SSD-2TB,X363G	BASE_BOM,DEVEL_BOM,CPU_SKL:2.9,RAM_16G_SAMSUNG_2133,4GB_SM_BAFFIN,BAFFIN_ULA,SSD_CONFIG:2TB
639-01623	MLB,2.9G,SM-16,ULA-SM,SSD-512,X363G	BASE_BOM,DEVEL_BOM,CPU_SKL:2.9,RAM_16G_SAMSUNG_2133,4GB_SM_BAFFIN,BAFFIN_ULA,SSD_CONFIG:512GB

36 PROA Configs

BOM NUMBER	BOM NAME	BOM OPTIONS
639-02655	MLB,2.7G,MC-16,PROA-HY,SSD-1TB,X363G	BASE_BOM,DEVEL_BOM,CPU_SKL:2.7,RAM_16G_MICRON_2133,2GB_HY_BAFFIN,BAFFIN_PROA,SSD_CONFIG:1TB
639-02656	MLB,2.7G,MC-16,PROA-HY,SSD-2TB,X363G	BASE_BOM,DEVEL_BOM,CPU_SKL:2.7,RAM_16G_MICRON_2133,2GB_HY_BAFFIN,BAFFIN_PROA,SSD_CONFIG:2TB
639-02654	MLB,2.7G,MC-16,PROA-HY,SSD-512,X363G	BASE_BOM,DEVEL_BOM,CPU_SKL:2.7,RAM_16G_MICRON_2133,2GB_HY_BAFFIN,BAFFIN_PROA,SSD_CONFIG:512GB
639-02664	MLB,2.7G,SM-16,PROA-HY,SSD-1TB,X363G	BASE_BOM,DEVEL_BOM,CPU_SKL:2.7,RAM_16G_SAMSUNG_2133,2GB_HY_BAFFIN,BAFFIN_PROA,SSD_CONFIG:1TB
639-02665	MLB,2.7G,SM-16,PROA-HY,SSD-2TB,X363G	BASE_BOM,DEVEL_BOM,CPU_SKL:2.7,RAM_16G_SAMSUNG_2133,2GB_HY_BAFFIN,BAFFIN_PROA,SSD_CONFIG:2TB
639-02663	MLB,2.7G,SM-16,PROA-HY,SSD-512,X363G	BASE_BOM,DEVEL_BOM,CPU_SKL:2.7,RAM_16G_SAMSUNG_2133,2GB_HY_BAFFIN,BAFFIN_PROA,SSD_CONFIG:512GB
639-02673	MLB,2.9G,MC-16,PROA-HY,SSD-1TB,X363G	BASE_BOM,DEVEL_BOM,CPU_SKL:2.9,RAM_16G_MICRON_2133,2GB_HY_BAFFIN,BAFFIN_PROA,SSD_CONFIG:1TB
639-02674	MLB,2.9G,MC-16,PROA-HY,SSD-2TB,X363G	BASE_BOM,DEVEL_BOM,CPU_SKL:2.9,RAM_16G_MICRON_2133,2GB_HY_BAFFIN,BAFFIN_PROA,SSD_CONFIG:2TB
639-02672	MLB,2.9G,MC-16,PROA-HY,SSD-512,X363G	BASE_BOM,DEVEL_BOM,CPU_SKL:2.9,RAM_16G_MICRON_2133,2GB_HY_BAFFIN,BAFFIN_PROA,SSD_CONFIG:512GB
639-02682	MLB,2.9G,SM-16,PROA-HY,SSD-1TB,X363G	BASE_BOM,DEVEL_BOM,CPU_SKL:2.9,RAM_16G_SAMSUNG_2133,2GB_HY_BAFFIN,BAFFIN_PROA,SSD_CONFIG:1TB
639-02683	MLB,2.9G,SM-16,PROA-HY,SSD-2TB,X363G	BASE_BOM,DEVEL_BOM,CPU_SKL:2.9,RAM_16G_SAMSUNG_2133,2GB_HY_BAFFIN,BAFFIN_PROA,SSD_CONFIG:2TB
639-02681	MLB,2.9G,SM-16,PROA-HY,SSD-512,X363G	BASE_BOM,DEVEL_BOM,CPU_SKL:2.9,RAM_16G_SAMSUNG_2133,2GB_HY_BAFFIN,BAFFIN_PROA,SSD_CONFIG:512GB
639-02652	MLB,2.7G,MC-16,PROA-MC,SSD-1TB,X363G	BASE_BOM,DEVEL_BOM,CPU_SKL:2.7,RAM_16G_MICRON_2133,2GB_MC_BAFFIN,BAFFIN_PROA,SSD_CONFIG:1TB
639-02653	MLB,2.7G,MC-16,PROA-MC,SSD-2TB,X363G	BASE_BOM,DEVEL_BOM,CPU_SKL:2.7,RAM_16G_MICRON_2133,2GB_MC_BAFFIN,BAFFIN_PROA,SSD_CONFIG:2TB
639-02651	MLB,2.7G,MC-16,PROA-MC,SSD-512,X363G	BASE_BOM,DEVEL_BOM,CPU_SKL:2.7,RAM_16G_MICRON_2133,2GB_MC_BAFFIN,BAFFIN_PROA,SSD_CONFIG:512GB
639-02661	MLB,2.7G,SM-16,PROA-MC,SSD-1TB,X363G	BASE_BOM,DEVEL_BOM,CPU_SKL:2.7,RAM_16G_SAMSUNG_2133,2GB_MC_BAFFIN,BAFFIN_PROA,SSD_CONFIG:1TB
639-02662	MLB,2.7G,SM-16,PROA-MC,SSD-2TB,X363G	BASE_BOM,DEVEL_BOM,CPU_SKL:2.7,RAM_16G_SAMSUNG_2133,2GB_MC_BAFFIN,BAFFIN_PROA,SSD_CONFIG:2TB
639-02660	MLB,2.7G,SM-16,PROA-MC,SSD-512,X363G	BASE_BOM,DEVEL_BOM,CPU_SKL:2.7,RAM_16G_SAMSUNG_2133,2GB_MC_BAFFIN,BAFFIN_PROA,SSD_CONFIG:512GB
639-02670	MLB,2.9G,MC-16,PROA-MC,SSD-1TB,X363G	BASE_BOM,DEVEL_BOM,CPU_SKL:2.9,RAM_16G_MICRON_2133,2GB_MC_BAFFIN,BAFFIN_PROA,SSD_CONFIG:1TB
639-02671	MLB,2.9G,MC-16,PROA-MC,SSD-2TB,X363G	BASE_BOM,DEVEL_BOM,CPU_SKL:2.9,RAM_16G_MICRON_2133,2GB_MC_BAFFIN,BAFFIN_PROA,SSD_CONFIG:2TB
639-02669	MLB,2.9G,MC-16,PROA-MC,SSD-512,X363G	BASE_BOM,DEVEL_BOM,CPU_SKL:2.9,RAM_16G_MICRON_2133,2GB_MC_BAFFIN,BAFFIN_PROA,SSD_CONFIG:512GB
639-02679	MLB,2.9G,SM-16,PROA-MC,SSD-1TB,X363G	BASE_BOM,DEVEL_BOM,CPU_SKL:2.9,RAM_16G_SAMSUNG_2133,2GB_MC_BAFFIN,BAFFIN_PROA,SSD_CONFIG:1TB
639-02680	MLB,2.9G,SM-16,PROA-MC,SSD-2TB,X363G	BASE_BOM,DEVEL_BOM,CPU_SKL:2.9,RAM_16G_SAMSUNG_2133,2GB_MC_BAFFIN,BAFFIN_PROA,SSD_CONFIG:2TB
639-02678	MLB,2.9G,SM-16,PROA-MC,SSD-512,X363G	BASE_BOM,DEVEL_BOM,CPU_SKL:2.9,RAM_16G_SAMSUNG_2133,2GB_MC_BAFFIN,BAFFIN_PROA,SSD_CONFIG:512GB
639-02649	MLB,2.7G,MC-16,PROA-SM,SSD-1TB,X363G	BASE_BOM,DEVEL_BOM,CPU_SKL:2.7,RAM_16G_MICRON_2133,2GB_SM_BAFFIN,BAFFIN_PROA,SSD_CONFIG:1TB
639-02650	MLB,2.7G,MC-16,PROA-SM,SSD-2TB,X363G	BASE_BOM,DEVEL_BOM,CPU_SKL:2.7,RAM_16G_MICRON_2133,2GB_SM_BAFFIN,BAFFIN_PROA,SSD_CONFIG:2TB
639-02648	MLB,2.7G,MC-16,PROA-SM,SSD-512,X363G	BASE_BOM,DEVEL_BOM,CPU_SKL:2.7,RAM_16G_MICRON_2133,2GB_SM_BAFFIN,BAFFIN_PROA,SSD_CONFIG:512GB
639-02658	MLB,2.7G,SM-16,PROA-SM,SSD-1TB,X363G	BASE_BOM,DEVEL_BOM,CPU_SKL:2.7,RAM_16G_SAMSUNG_2133,2GB_SM_BAFFIN,BAFFIN_PROA,SSD_CONFIG:1TB
639-02659	MLB,2.7G,SM-16,PROA-SM,SSD-2TB,X363G	BASE_BOM,DEVEL_BOM,CPU_SKL:2.7,RAM_16G_SAMSUNG_2133,2GB_SM_BAFFIN,BAFFIN_PROA,SSD_CONFIG:2TB
639-02657	MLB,2.7G,SM-16,PROA-SM,SSD-512,X363G	BASE_BOM,DEVEL_BOM,CPU_SKL:2.7,RAM_16G_SAMSUNG_2133,2GB_SM_BAFFIN,BAFFIN_PROA,SSD_CONFIG:512GB
639-02667	MLB,2.9G,MC-16,PROA-SM,SSD-1TB,X363G	BASE_BOM,DEVEL_BOM,CPU_SKL:2.9,RAM_16G_MICRON_2133,2GB_SM_BAFFIN,BAFFIN_PROA,SSD_CONFIG:1TB
639-02668	MLB,2.9G,MC-16,PROA-SM,SSD-2TB,X363G	BASE_BOM,DEVEL_BOM,CPU_SKL:2.9,RAM_16G_MICRON_2133,2GB_SM_BAFFIN,BAFFIN_PROA,SSD_CONFIG:2TB
639-02666	MLB,2.9G,MC-16,PROA-SM,SSD-512,X363G	BASE_BOM,DEVEL_BOM,CPU_SKL:2.9,RAM_16G_MICRON_2133,2GB_SM_BAFFIN,BAFFIN_PROA,SSD_CONFIG:512GB
639-02676	MLB,2.9G,SM-16,PROA-SM,SSD-1TB,X363G	BASE_BOM,DEVEL_BOM,CPU_SKL:2.9,RAM_16G_SAMSUNG_2133,2GB_SM_BAFFIN,BAFFIN_PROA,SSD_CONFIG:1TB
639-02677	MLB,2.9G,SM-16,PROA-SM,SSD-2TB,X363G	BASE_BOM,DEVEL_BOM,CPU_SKL:2.9,RAM_16G_SAMSUNG_2133,2GB_SM_BAFFIN,BAFFIN_PROA,SSD_CONFIG:2TB
639-02675	MLB,2.9G,SM-16,PROA-SM,SSD-512,X363G	BASE_BOM,DEVEL_BOM,CPU_SKL:2.9,RAM_16G_SAMSUNG_2133,2GB_SM_BAFFIN,BAFFIN_PROA,SSD_CONFIG:512GB

BOM Variants, Power/Socket Configs

BOM NUMBER	BOM NAME	BOM OPTIONS
639-01966	PCBA,MLB,NONE,SM-16,FB4-SM,S256,X363	BASE_BOM,DEVEL_BOM,RAM_16G_SAMSUNG_2133,4GB_SM_BAFFIN,SSD_CONFIG:256GB
639-01967	PCBA,MLB,SKT,VDDC,SM-16,FB4-SM,S256,X363	BASE_BOM,DEVEL_BOM,STARDUST:VDDC,RAM_16G_SAMSUNG_2133,4GB_SM_BAFFIN,SSD_CONFIG:256GB
639-01968	PCBA,MLB,SKT,MVDD,SM-16,FB4-SM,S256,X363	BASE_BOM,DEVEL_BOM,STARDUST:VDDC2_MVDD,RAM_16G_SAMSUNG_2133,4GB_SM_BAFFIN,SSD_CONFIG:256GB
639-01969	PCBA,MLB,SKT,CPU,SM-16,FB4-SM,S256,X363	BASE_BOM,DEVEL_BOM,CPU_SKL:SOCKET,RAM_16G_SAMSUNG_2133,4GB_SM_BAFFIN,SSD_CONFIG:256GB

SYNC_MASTER=J80_MLB SYNC_DATE=07/23/2015

PAGE TITLE
639 BOM Configuration

Apple Inc.

DRAWING NUMBER 051-00647 SIZE D

REVISION 10.0.0

BRANCH dvt-fab10

PAGE 141 OF 145

SHEET 119 OF 121

NOTICE OF PROPRIETARY PROPERTY:
THE INFORMATION CONTAINED HEREIN IS THE PROPRIETARY PROPERTY OF APPLE INC.
THE POSESSOR AGREES TO THE FOLLOWING:
I TO MAINTAIN THIS DOCUMENT IN CONFIDENCE
II NOT TO REPRODUCE OR COPY IT
III NOT TO REVEAL OR PUBLISH IT IN WHOLE OR PART
IV ALL RIGHTS RESERVED

WWW.AliSaler.Com

BOM Variants

48 LEA Configs

BOM NUMBER	BOM NAME	BOM OPTIONS
639-02621	MLB,2.6G,MC-16,LEA-HY,SSD-1TB,X363G	BASE_BOM,DEVEL_BOM,CPU_SKL:2.6,RAM_16G_MICRON_2133,2GB_HY_BAFFIN,BAFFIN_LEA,SSD_CONFIG:1TB
639-02618	MLB,2.6G,MC-16,LEA-HY,SSD-256,X363G	BASE_BOM,DEVEL_BOM,CPU_SKL:2.6,RAM_16G_MICRON_2133,2GB_HY_BAFFIN,BAFFIN_LEA,SSD_CONFIG:256GB
639-02622	MLB,2.6G,MC-16,LEA-HY,SSD-2TB,X363G	BASE_BOM,DEVEL_BOM,CPU_SKL:2.6,RAM_16G_MICRON_2133,2GB_HY_BAFFIN,BAFFIN_LEA,SSD_CONFIG:2TB
639-02620	MLB,2.6G,MC-16,LEA-HY,SSD-512,X363G	BASE_BOM,DEVEL_BOM,CPU_SKL:2.6,RAM_16G_MICRON_2133,2GB_HY_BAFFIN,BAFFIN_LEA,SSD_CONFIG:512GB
639-02608	MLB,2.6G,SM-16,LEA-HY,SSD-1TB,X363G	BASE_BOM,DEVEL_BOM,CPU_SKL:2.6,RAM_16G_SAMSUNG_2133,2GB_HY_BAFFIN,BAFFIN_LEA,SSD_CONFIG:1TB
639-02602	MLB,2.6G,SM-16,LEA-HY,SSD-256,X363G	BASE_BOM,DEVEL_BOM,CPU_SKL:2.6,RAM_16G_SAMSUNG_2133,2GB_HY_BAFFIN,BAFFIN_LEA,SSD_CONFIG:256GB
639-02611	MLB,2.6G,SM-16,LEA-HY,SSD-2TB,X363G	BASE_BOM,DEVEL_BOM,CPU_SKL:2.6,RAM_16G_SAMSUNG_2133,2GB_HY_BAFFIN,BAFFIN_LEA,SSD_CONFIG:2TB
639-02605	MLB,2.6G,SM-16,LEA-HY,SSD-512,X363G	BASE_BOM,DEVEL_BOM,CPU_SKL:2.6,RAM_16G_SAMSUNG_2133,2GB_HY_BAFFIN,BAFFIN_LEA,SSD_CONFIG:512GB
639-02645	MLB,2.9G,MC-16,LEA-HY,SSD-1TB,X363G	BASE_BOM,DEVEL_BOM,CPU_SKL:2.9,RAM_16G_MICRON_2133,2GB_HY_BAFFIN,BAFFIN_LEA,SSD_CONFIG:1TB
639-02643	MLB,2.9G,MC-16,LEA-HY,SSD-256,X363G	BASE_BOM,DEVEL_BOM,CPU_SKL:2.9,RAM_16G_MICRON_2133,2GB_HY_BAFFIN,BAFFIN_LEA,SSD_CONFIG:256GB
639-02646	MLB,2.9G,MC-16,LEA-HY,SSD-2TB,X363G	BASE_BOM,DEVEL_BOM,CPU_SKL:2.9,RAM_16G_MICRON_2133,2GB_HY_BAFFIN,BAFFIN_LEA,SSD_CONFIG:2TB
639-02644	MLB,2.9G,MC-16,LEA-HY,SSD-512,X363G	BASE_BOM,DEVEL_BOM,CPU_SKL:2.9,RAM_16G_MICRON_2133,2GB_HY_BAFFIN,BAFFIN_LEA,SSD_CONFIG:512GB
639-02633	MLB,2.9G,SM-16,LEA-HY,SSD-1TB,X363G	BASE_BOM,DEVEL_BOM,CPU_SKL:2.9,RAM_16G_SAMSUNG_2133,2GB_HY_BAFFIN,BAFFIN_LEA,SSD_CONFIG:1TB
639-02631	MLB,2.9G,SM-16,LEA-HY,SSD-256,X363G	BASE_BOM,DEVEL_BOM,CPU_SKL:2.9,RAM_16G_SAMSUNG_2133,2GB_HY_BAFFIN,BAFFIN_LEA,SSD_CONFIG:256GB
639-02634	MLB,2.9G,SM-16,LEA-HY,SSD-2TB,X363G	BASE_BOM,DEVEL_BOM,CPU_SKL:2.9,RAM_16G_SAMSUNG_2133,2GB_HY_BAFFIN,BAFFIN_LEA,SSD_CONFIG:2TB
639-02632	MLB,2.9G,SM-16,LEA-HY,SSD-512,X363G	BASE_BOM,DEVEL_BOM,CPU_SKL:2.9,RAM_16G_SAMSUNG_2133,2GB_HY_BAFFIN,BAFFIN_LEA,SSD_CONFIG:512GB
639-02647	MLB,2.6G,MC-16,LEA-MC,SSD-1TB,X363G	BASE_BOM,DEVEL_BOM,CPU_SKL:2.6,RAM_16G_MICRON_2133,2GB_MC_BAFFIN,BAFFIN_LEA,SSD_CONFIG:1TB
639-02616	MLB,2.6G,MC-16,LEA-MC,SSD-256,X363G	BASE_BOM,DEVEL_BOM,CPU_SKL:2.6,RAM_16G_MICRON_2133,2GB_MC_BAFFIN,BAFFIN_LEA,SSD_CONFIG:256GB
639-02619	MLB,2.6G,MC-16,LEA-MC,SSD-2TB,X363G	BASE_BOM,DEVEL_BOM,CPU_SKL:2.6,RAM_16G_MICRON_2133,2GB_MC_BAFFIN,BAFFIN_LEA,SSD_CONFIG:2TB
639-02617	MLB,2.6G,MC-16,LEA-MC,SSD-512,X363G	BASE_BOM,DEVEL_BOM,CPU_SKL:2.6,RAM_16G_MICRON_2133,2GB_MC_BAFFIN,BAFFIN_LEA,SSD_CONFIG:512GB
639-02607	MLB,2.6G,SM-16,LEA-MC,SSD-1TB,X363G	BASE_BOM,DEVEL_BOM,CPU_SKL:2.6,RAM_16G_SAMSUNG_2133,2GB_MC_BAFFIN,BAFFIN_LEA,SSD_CONFIG:1TB
639-02601	MLB,2.6G,SM-16,LEA-MC,SSD-256,X363G	BASE_BOM,DEVEL_BOM,CPU_SKL:2.6,RAM_16G_SAMSUNG_2133,2GB_MC_BAFFIN,BAFFIN_LEA,SSD_CONFIG:256GB
639-02610	MLB,2.6G,SM-16,LEA-MC,SSD-2TB,X363G	BASE_BOM,DEVEL_BOM,CPU_SKL:2.6,RAM_16G_SAMSUNG_2133,2GB_MC_BAFFIN,BAFFIN_LEA,SSD_CONFIG:2TB
639-02604	MLB,2.6G,SM-16,LEA-MC,SSD-512,X363G	BASE_BOM,DEVEL_BOM,CPU_SKL:2.6,RAM_16G_SAMSUNG_2133,2GB_MC_BAFFIN,BAFFIN_LEA,SSD_CONFIG:512GB
639-02641	MLB,2.9G,MC-16,LEA-MC,SSD-1TB,X363G	BASE_BOM,DEVEL_BOM,CPU_SKL:2.9,RAM_16G_MICRON_2133,2GB_MC_BAFFIN,BAFFIN_LEA,SSD_CONFIG:1TB
639-02639	MLB,2.9G,MC-16,LEA-MC,SSD-256,X363G	BASE_BOM,DEVEL_BOM,CPU_SKL:2.9,RAM_16G_MICRON_2133,2GB_MC_BAFFIN,BAFFIN_LEA,SSD_CONFIG:256GB
639-02642	MLB,2.9G,MC-16,LEA-MC,SSD-2TB,X363G	BASE_BOM,DEVEL_BOM,CPU_SKL:2.9,RAM_16G_MICRON_2133,2GB_MC_BAFFIN,BAFFIN_LEA,SSD_CONFIG:2TB
639-02640	MLB,2.9G,MC-16,LEA-MC,SSD-512,X363G	BASE_BOM,DEVEL_BOM,CPU_SKL:2.9,RAM_16G_MICRON_2133,2GB_MC_BAFFIN,BAFFIN_LEA,SSD_CONFIG:512GB
639-02629	MLB,2.9G,SM-16,LEA-MC,SSD-1TB,X363G	BASE_BOM,DEVEL_BOM,CPU_SKL:2.9,RAM_16G_SAMSUNG_2133,2GB_MC_BAFFIN,BAFFIN_LEA,SSD_CONFIG:1TB
639-02627	MLB,2.9G,SM-16,LEA-MC,SSD-256,X363G	BASE_BOM,DEVEL_BOM,CPU_SKL:2.9,RAM_16G_SAMSUNG_2133,2GB_MC_BAFFIN,BAFFIN_LEA,SSD_CONFIG:256GB
639-02630	MLB,2.9G,SM-16,LEA-MC,SSD-2TB,X363G	BASE_BOM,DEVEL_BOM,CPU_SKL:2.9,RAM_16G_SAMSUNG_2133,2GB_MC_BAFFIN,BAFFIN_LEA,SSD_CONFIG:2TB
639-02628	MLB,2.9G,SM-16,LEA-MC,SSD-512,X363G	BASE_BOM,DEVEL_BOM,CPU_SKL:2.9,RAM_16G_SAMSUNG_2133,2GB_MC_BAFFIN,BAFFIN_LEA,SSD_CONFIG:512GB
639-02614	MLB,2.6G,MC-16,LEA-SM,SSD-1TB,X363G	BASE_BOM,DEVEL_BOM,CPU_SKL:2.6,RAM_16G_MICRON_2133,2GB_SM_BAFFIN,BAFFIN_LEA,SSD_CONFIG:1TB
639-02612	MLB,2.6G,MC-16,LEA-SM,SSD-256,X363G	BASE_BOM,DEVEL_BOM,CPU_SKL:2.6,RAM_16G_MICRON_2133,2GB_SM_BAFFIN,BAFFIN_LEA,SSD_CONFIG:256GB
639-02615	MLB,2.6G,MC-16,LEA-SM,SSD-2TB,X363G	BASE_BOM,DEVEL_BOM,CPU_SKL:2.6,RAM_16G_MICRON_2133,2GB_SM_BAFFIN,BAFFIN_LEA,SSD_CONFIG:2TB
639-02613	MLB,2.6G,MC-16,LEA-SM,SSD-512,X363G	BASE_BOM,DEVEL_BOM,CPU_SKL:2.6,RAM_16G_MICRON_2133,2GB_SM_BAFFIN,BAFFIN_LEA,SSD_CONFIG:512GB
639-02606	MLB,2.6G,SM-16,LEA-SM,SSD-1TB,X363G	BASE_BOM,DEVEL_BOM,CPU_SKL:2.6,RAM_16G_SAMSUNG_2133,2GB_SM_BAFFIN,BAFFIN_LEA,SSD_CONFIG:1TB
639-02600	MLB,2.6G,SM-16,LEA-SM,SSD-256,X363G	BASE_BOM,DEVEL_BOM,CPU_SKL:2.6,RAM_16G_SAMSUNG_2133,2GB_SM_BAFFIN,BAFFIN_LEA,SSD_CONFIG:256GB
639-02609	MLB,2.6G,SM-16,LEA-SM,SSD-2TB,X363G	BASE_BOM,DEVEL_BOM,CPU_SKL:2.6,RAM_16G_SAMSUNG_2133,2GB_SM_BAFFIN,BAFFIN_LEA,SSD_CONFIG:2TB
639-02603	MLB,2.6G,SM-16,LEA-SM,SSD-512,X363G	BASE_BOM,DEVEL_BOM,CPU_SKL:2.6,RAM_16G_SAMSUNG_2133,2GB_SM_BAFFIN,BAFFIN_LEA,SSD_CONFIG:512GB
639-02637	MLB,2.9G,MC-16,LEA-SM,SSD-1TB,X363G	BASE_BOM,DEVEL_BOM,CPU_SKL:2.9,RAM_16G_MICRON_2133,2GB_SM_BAFFIN,BAFFIN_LEA,SSD_CONFIG:1TB
639-02635	MLB,2.9G,MC-16,LEA-SM,SSD-256,X363G	BASE_BOM,DEVEL_BOM,CPU_SKL:2.9,RAM_16G_MICRON_2133,2GB_SM_BAFFIN,BAFFIN_LEA,SSD_CONFIG:256GB
639-02638	MLB,2.9G,MC-16,LEA-SM,SSD-2TB,X363G	BASE_BOM,DEVEL_BOM,CPU_SKL:2.9,RAM_16G_MICRON_2133,2GB_SM_BAFFIN,BAFFIN_LEA,SSD_CONFIG:2TB
639-02636	MLB,2.9G,MC-16,LEA-SM,SSD-512,X363G	BASE_BOM,DEVEL_BOM,CPU_SKL:2.9,RAM_16G_MICRON_2133,2GB_SM_BAFFIN,BAFFIN_LEA,SSD_CONFIG:512GB
639-02625	MLB,2.9G,SM-16,LEA-SM,SSD-1TB,X363G	BASE_BOM,DEVEL_BOM,CPU_SKL:2.9,RAM_16G_SAMSUNG_2133,2GB_SM_BAFFIN,BAFFIN_LEA,SSD_CONFIG:1TB
639-02623	MLB,2.9G,SM-16,LEA-SM,SSD-256,X363G	BASE_BOM,DEVEL_BOM,CPU_SKL:2.9,RAM_16G_SAMSUNG_2133,2GB_SM_BAFFIN,BAFFIN_LEA,SSD_CONFIG:256GB
639-02626	MLB,2.9G,SM-16,LEA-SM,SSD-2TB,X363G	BASE_BOM,DEVEL_BOM,CPU_SKL:2.9,RAM_16G_SAMSUNG_2133,2GB_SM_BAFFIN,BAFFIN_LEA,SSD_CONFIG:2TB
639-02624	MLB,2.9G,SM-16,LEA-SM,SSD-512,X363G	BASE_BOM,DEVEL_BOM,CPU_SKL:2.9,RAM_16G_SAMSUNG_2133,2GB_SM_BAFFIN,BAFFIN_LEA,SSD_CONFIG:512GB

SYNC_MASTER=J80_MLB SYNC_DATE=07/23/2015

PAGE TITLE
639 BOM Configuration 2

Apple Inc.

DRAWING NUMBER 051-00647 SIZE D

REVISION 10.0.0

BRANCH dvt-fab10

PAGE 142 OF 145

SHEET 120 OF 121

NOTICE OF PROPRIETARY PROPERTY:
THE INFORMATION CONTAINED HEREIN IS THE PROPRIETARY PROPERTY OF APPLE INC.
THE POSESSOR AGREES TO THE FOLLOWING:
I TO MAINTAIN THIS DOCUMENT IN CONFIDENCE
II NOT TO REPRODUCE OR COPY IT
III NOT TO REVEAL OR PUBLISH IT IN WHOLE OR PART
IV ALL RIGHTS RESERVED

WWW.AliSaler.Com

Alternate Parts

PART NUMBER	ALTERNATE FOR PART NUMBER	BOM OPTION	REF DES	COMMENTS:	
740S0144	740S0118		ALL		
740S00003	740S0135		ALL		
376S1089	376S1128		ALL		
376S1080	376S0820		ALL		
376S00086	376S0761		ALL		
376S00074	376S0855		ALL		
376S00014	376S0761		ALL		
372S0186	372S0185		ALL		
371S0713	371S0558		ALL		
311S00060	311S0273		ALL		
311S00004	311S0370		ALL		
155S0914	155S0897		ALL		
155S0694	155S0387		ALL		
155S0660	155S0513		ALL		
155S00154	155S0398		ALL		
155S00007	155S0667		ALL		
138S0863	138S0853		ALL		
138S0775	138S0860		ALL		<rdar://problem/23155097> for IG <rdar://problem/23564467> for EG
138S0703	138S0648		ALL		<rdar://problem/23118884> for IG <rdar://problem/> for EG
132S00064	132S0409		ALL		
128S0325	128S0397		ALL		
128S00029	128S00007		ALL		
128S00026	128S00011		ALL		
128S00070	128S00007		ALL		<rdar://problem/25329164>
128S00009	128S00007		ALL		
107S0249	107S0251		ALL		
107S00071	107S00053		ALL		
107S00070	107S0085		ALL		
107S00033	107S00034		ALL		BLC
107S00015	107S00011		ALL		
376S1106	376S0678		ALL	Fairchild alt to Vishay	BLC
138S0738	138S1101		ALL	Samsung alt to Murata	BLC
138S0846	138S0811		ALL	Samsung alt to Murata	BLC
376S1053	376S0604		ALL	Diodes alt to Fairchild	BLC
152S00359	152S00253		ALL	Chillisin alt to Cyntec	BLC
740S00027	740S0159		ALL	Bourns alt to Little Fuse	BLC
371S0704	371S00077		ALL	NXP alt to Diodes	BLC
138S00032	138S0831		ALL		BLC
138S00049	138S0831		ALL		BLC

PART NUMBER	ALTERNATE FOR PART NUMBER	BOM OPTION	REF DES	COMMENTS:	
					220uF 2.0V D-case, 128S00044 DQ
998-04070	998-04071		OFF	Hynix alt to SS	- T208
128S00010	128S00011		ALL		
128S00031	128S00011		ALL		
138S00084	138S00060		ALL		<rdar://problem/23118634> for IG <rdar://problem/23527737> for EG
155S00155	155S0441		OFF		(Stale; delete later after page sync)
155S00190	155S0897		ALL		
353S00107	353S3239		ALL		
353S00525	353S4471		ALL		
376S1193	376S00037		OFF		
740S00028	740S0118		ALL		
152S00369	152S00268		ALL	Cyntec w/ NEC	<rdar://problem/23405116> for IG <rdar://problem/23542193> for EG
128S0296	128S0487		ALL	NEC w/ pana	<rdar://problem/23422212> for IG <rdar://problem/23527282> for EG
128S00012	128S0487		ALL	NEC w/ Rohm	
155S00188	155S0275		ALL	Murata w/ Taiyo	<rdar://problem/23446936> for IG <rdar://problem/23542939> for EG
155S00018	155S0664		ALL	Murata w/ Taiyo	<rdar://problem/23447549> for IG <rdar://problem/23543068> for EG
152S00388	152S00182		ALL		<rdar://problem/23542023>
107S0240	107S0255		ALL		<rdar://problem/23520324>
128S00062	128S00067		ALL	NEC for Panasonic	150uF 6.3V B12
138S0660	138S0684		ALL		<rdar://problem/24316249>
155S00204	155S0731		ALL		<rdar://problem/24310837>

PART NUMBER	ALTERNATE FOR PART NUMBER	BOM OPTION	REF DES	COMMENTS:	
311S0271	311S00008		ALL	NXP w/ Diodes	(Stale; delete later after page sync) <rdar://problem/23117984> for IG <rdar://problem/24316367> for EG
197S00046	197S00036		ALL	Epson w/ TXC	<rdar://problem/23117749> for IG <rdar://problem/23543146> for EG
197S00047	197S00036		ALL	Kyocera w/ TXC	
197S00048	197S00036		ALL	Murata w/ TXC	
197S00053	197S00050		ALL	Kyocera w/ TXC	<rdar://problem/23117849> for IG <rdar://problem/23543858> for EG
197S00054	197S00050		ALL	NDK w/ TXC	
197S00055	197S00050		ALL	Murata w/ TXC	
311S0596	311S0593		ALL	NXP w/ Diodes	<rdar://problem/23118093> for IG <rdar://problem/23544024> for EG
107S0276	107S00020		ALL	Cyntec w/ TFT	<rdar://problem/23117951> for IG <rdar://problem/23542988> for EG
107S00021	107S0284		ALL	TFT w/ Yageo	<rdar://problem/23129685> for IG <rdar://problem/23519943> for EG
132S00012	132S0401		ALL	Taiyo w/ Murata&TDK	<rdar://problem/23118402> for IG <rdar://problem/23527525> for EG
152S00343	152S1682		ALL	NXP w/ Diodes	<rdar://problem/23541694> for IG <rdar://problem/23541871> for EG
107S00087	107S00029		ALL	TFT w/ Yageo	<rdar://problem/23121290> for IG <rdar://problem/23520039> for EG
128S00057	128S00018		ALL	NEC w/ Vishay	<rdar://problem/23363718> for IG <rdar://problem/23526361> for EG
128S00058	128S00018		ALL	NEC w/ Rohm	
128S0364	128S0264		ALL	Kemet w/ Panasonic	<rdar://problem/23366105> for IG <rdar://problem/23527232> for EG
138S0641	138S0700		ALL	Murata w/ SS&Taiyo	<rdar://problem/23118759> for IG <rdar://problem/23528188> for EG
138S0739	138S0706		ALL	NEC w/ Vishay	<rdar://problem/23118915> for IG <rdar://problem/23528364 for EG
138S0945	138S0706		ALL	NEC w/ Rohm	
152S00358	152S00208		ALL	Murata w/ Chillisin	<rdar://problem/23119390> for IG <rdar://problem/23542069> for EG
152S00389	152S00241		OFF	Cyntec w/ Vishay	<rdar://problem/23342644> for IG <rdar://problem/> for EG
152S00390	152S00265		OFF	Cyntec w/ Vishay	<rdar://problem/23342719> for IG <rdar://problem/> for EG
152S00400	152S1872		ALL	Murata w/ Cyntec	
152S1872	152S00361		ALL	Murata w/ Cyntec	<rdar://problem/23132240> for IG <rdar://problem/23542412> for EG
155S00034	155S0706		ALL	Taiyo w/ Murata	<rdar://problem/23118820> for IG <rdar://problem/23543018> for EG
371S00082	371S00046		ALL	On-Semi w/ Diodes	<rdar://problem/23341512> for IG <rdar://problem/23545301> for EG
376S00146	376S1061		ALL	NXP w/ Diodes	<rdar://problem/23341674> for IG <rdar://problem/23545469> for EG
353S00711	353S2073		ALL	On Semi w/ TI	<rdar://problem/23605939> for IG <rdar://problem/23605957> for EG
740S00019	740S00007		ALL	Bourns w/ Polytronics	<rdar://problem/23137505> for IG <rdar://problem/23545479> for EG
155S00189	155S0342		ALL	Murata w/ Taiyo	<rdar://problem/23117986> for IG <rdar://problem/23543015> for EG
132S0438	132S0428		ALL	Murata w/ Taiyo&TDK	<rdar://problem/23118548> for IG <rdar://problem/23527609> for EG
138S0714	138S0713		ALL	Murata w/ Samsung	<rdar://problem/23118842> for IG <rdar://problem/23528300> for EG
138S0715	138S0732		ALL	Murata w/ Samsung	<rdar://problem/23118873> for IG <rdar://problem/23528349> for EG
107S00086	107S00056		ALL	TFT w/ Cyntec	<rdar://problem/23121312> for IG <rdar://problem/23520074> for EG
138S0875	138S0678		ALL	Taiyo w/ Mur&SS	<rdar://problem/23129763> for IG <rdar://problem/23528106> for EG
138S0786	138S0705		ALL	Murata w/ Samsung	<rdar://problem/23129934> for IG <rdar://problem/23528216> for EG
155S0382	155S0659		ALL	Murata w/ TDK	<rdar://problem/23132624> for IG <rdar://problem/23543045> for EG
152S2052	152S1954		ALL	Taiyo w/ Cyntec	<rdar://problem/23135833> for IG <rdar://problem/23542478> for EG
152S2015	152S1958		ALL	Taiyo w/ Cyntec	<rdar://problem/23137154> for IG <rdar://problem/23542579> for EG
128S00055	128S00002		ALL	Kemet w/ Panasonic	<rdar://problem/23148659> for IG <rdar://problem/23526236> for EG
138S0748	138S0751		ALL	Murata w/ SS	<rdar://problem/23155052> for IG <rdar://problem/23528417> for EG
138S00102	138S0773		ALL	Murata w/ Taiyo	<rdar://problem/23155089> for IG <rdar://problem/23529046> for EG
138S0789	138S0941		ALL	Murata w/ SS	<rdar://problem/23155132> for IG <rdar://problem/23529142> for EG
107S00101	107S00005		ALL	Cyntec w/ Yageo	<rdar://problem/23193801> for IG <rdar://problem/23518872> for EG
107S00102	107S00017		ALL	Cyntec w/ Yageo	<rdar://problem/23194019> for IG <rdar://problem/23519914> for EG
107S00100	107S00057		ALL	Cyntec w/ TFT	<rdar://problem/23224358> for IG <rdar://problem/23528119> for EG
107S00103	107S00058		ALL	Cyntec w/ Yageo	<rdar://problem/23228523> for IG <rdar://problem/23520163> for EG
107S00104	107S00061		ALL	Cyntec w/ Yageo	<rdar://problem/23229217> for IG <rdar>problem/23520193> for EG
107S00105	107S00062		ALL	Cyntec w/ Yageo	<rdar://problem/23230371> for IG <rdar://problem/23520241> for EG
152S00403	152S00322		ALL	Murata w/ Chillisin	<rdar://problem/23341061> for IG <rdar://problem/23542282> for EG
353S00852	353S4262		ALL	TI w/ OnSemi	<rdar://problem/23341158> for IG <rdar>problem/23542282> for EG
138S00104	138S0978		ALL		<rdar://problem/23583487>
128S00069	128S00067		ALL	Rohm for Panasonic	150uF 6.3V B12 <rdar://problem/23527054>
138S0759	138S0762		ALL		<rdar://problem/23582324>
377S0077	377S0183		ALL		<rdar://problem/23640745>
152S00363	152S00048		ALL		<rdar://problem/23541533>
138S00111	138S00036		ALL		<rdar://problem/23546425>
138S00097	138S0750		ALL		<rdar://problem/23581953>
155S00203	155S0894		ALL		<rdar://problem/24285018>
116S00006	116S0175		ALL		<rdar://problem/23524119>
311S00104	311S00091		ALL		<rdar://problem/23640575>

PART NUMBER	ALTERNATE FOR PART NUMBER	BOM OPTION	REF DES	COMMENTS:	
311S00013	311S0508		ALL	Part will be stuffed in production	<rdar://problem/24316400>
311S00118	311S0489		ALL		<rdar://problem/27623384>
311S00072	311S0657		ALL		<rdar://problem/23595055>
311S00090	311S00028		ALL		<rdar://problem/23602138>
353S00750	353S00877		ALL		<rdar://problem/23545068>
353S00878	353S00599		ALL		<rdar://problem/23545040>
311S00105	311S0233		ALL		<rdar://problem/24316381>
353S00880	353S3452		ALL		<rdar://problem/23545099>
311S00007	311S0426		ALL		<rdar://problem/23597412>
128S0445	128S0392		ALL		<rdar://problem/23566873>
152S00415	152S00140		ALL		<rdar://problem/23766197>
128S0436	128S0392		ALL		<rdar://problem/23566873>
343S00135	343S00136		ALL	T208	
343S00137	343S00136		ALL	T208	
343S00138	343S00136		ALL	T208	
138S00105	138S00037		ALL		<rdar://problem/23640133>
152S00434	152S1829		ALL		<rdar://problem/23825631>
353S3527	353S3528		ALL		<rdar://problem/24492801>
353S3526	353S3528		ALL		<rdar://problem/24492801>
353S00135	353S00034		ALL		<rdar://problem/24534121>
353S2220	353S00034		ALL		<rdar://problem/24534121>
353S00769	353S4398		ALL		<rdar://problem/24534714>
353S00879	353S00754		ALL		<rdar://problem/23545008>
104S00012	155S0398		ALL		<rdar://problem/25180014>
353S4342	353S00854		ALL		<rdar://problem/23621422>
152S00543	152S00484		ALL		<rdar://problem/24780681>
371S00089	371S00085		ALL		<rdar://problem/24806090>
107S00111	107S00110		ALL		<rdar://problem/24968171>
335S00213	335S0888		ALL		<rdar://problem/24985900>
311S0437	311S00112		ALL		<rdar://problem/24747570>
377S0178	377S00031		ALL		<rdar://problem/25118595>
371S00091	371S00083		ALL		<rdar://problem/24827333>
197S00069	197S00068		ALL		<rdar://problem/24473517>
138S0698	138S00113		ALL		<rdar://problem/23528153>
152S00461	152S00112		ALL		<rdar://problem/24417973>
371S00074	371S0602		ALL		<rdar://problem/25919460>
197S00082	197S00081		ALL		
353S00991	353S00920		ALL		
131S00134	131S00041		ALL		<rdar://problem/24316117>

PAGE TITLE

Alternates BOM Table

Apple Inc.

DRAWING NUMBER 051-00647 SIZE D

REVISION 10.0.0

BRANCH dvt-fab10

PAGE 145 OF 145

SHEET 121 OF 121

NOTICE OF PROPRIETARY PROPERTY:

THE INFORMATION CONTAINED HEREIN IS THE PROPRIETARY PROPERTY OF APPLE INC.
THE POSESSOR AGREES TO THE FOLLOWING:
I TO MAINTAIN THIS DOCUMENT IN CONFIDENCE
II NOT TO REPRODUCE OR COPY IT
III NOT TO REVEAL OR PUBLISH IT IN WHOLE OR PART
IV ALL RIGHTS RESERVED

WWW.AliSaler.Com